Parts List			
ITEM	QTY	PART NUMBER	DESCRIPTION
1	1	40ERN	COLLET NUT
2	1	BS-10	BACK-UP SCREW; 1 1/8-16 L.H.

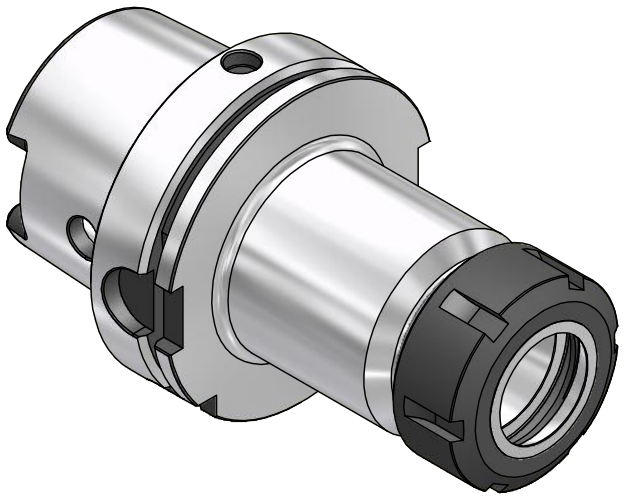

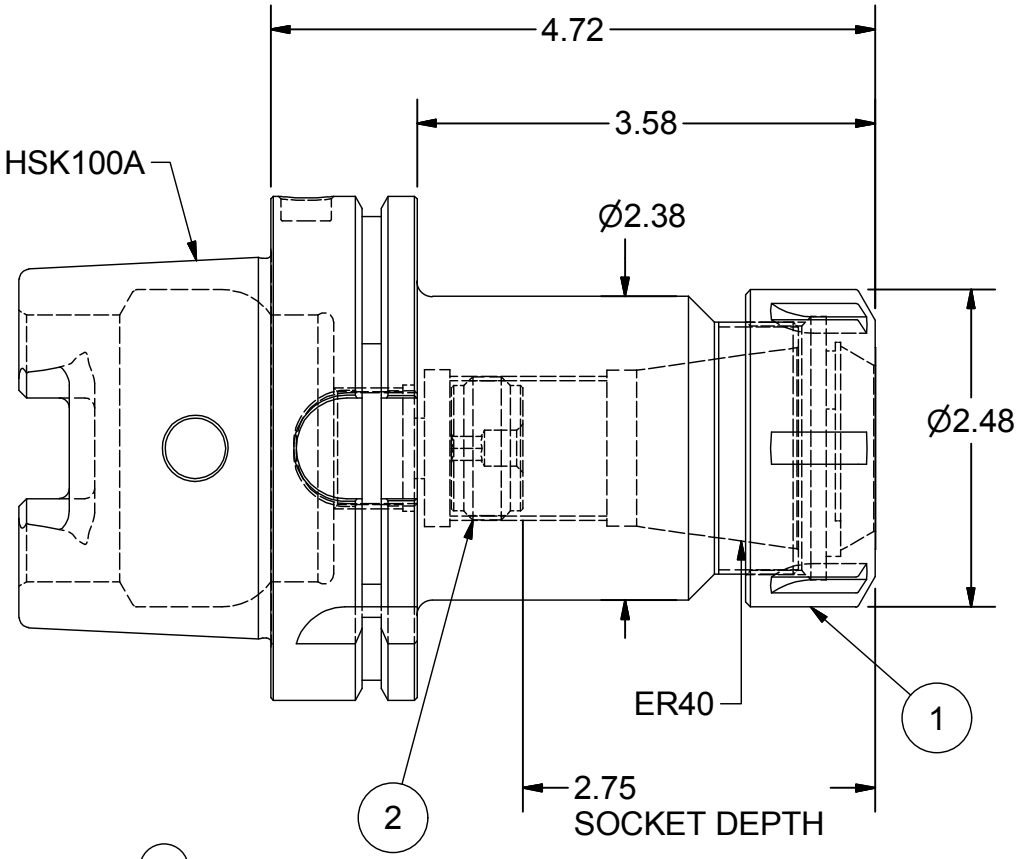

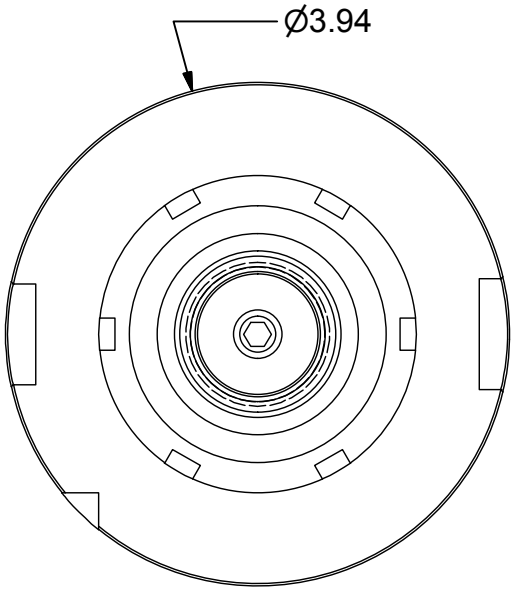

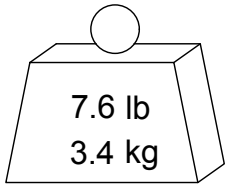

PART NUMBER

H100-40ERF472

PARLEC
(800) TOOL USA
WORLD HEADQUARTERS
101 PERINTON PARKWAY
FAIRPORT, NEW YORK 14450