ITEMS SHOWN ON THIS DOCUMENT CONTAIN PROPRIETARY INFORMATION OF PARLEC INC. AND IS SUBJECT TO BEING RETURNED UPON REQUEST. IT SHALL NOT BE REPRODUCED IN WHOLE OR PART WITHOUT WRITTEN PERMISSION OF PARLEC INC. ANY AUTHORIZED REPRODUCTION MUST BEAR THIS ENTIRE LEGEND.

REVISION RECORD

LET	DESCRIPTION	BY	DATE
A	RELEASED	JGS	11/22

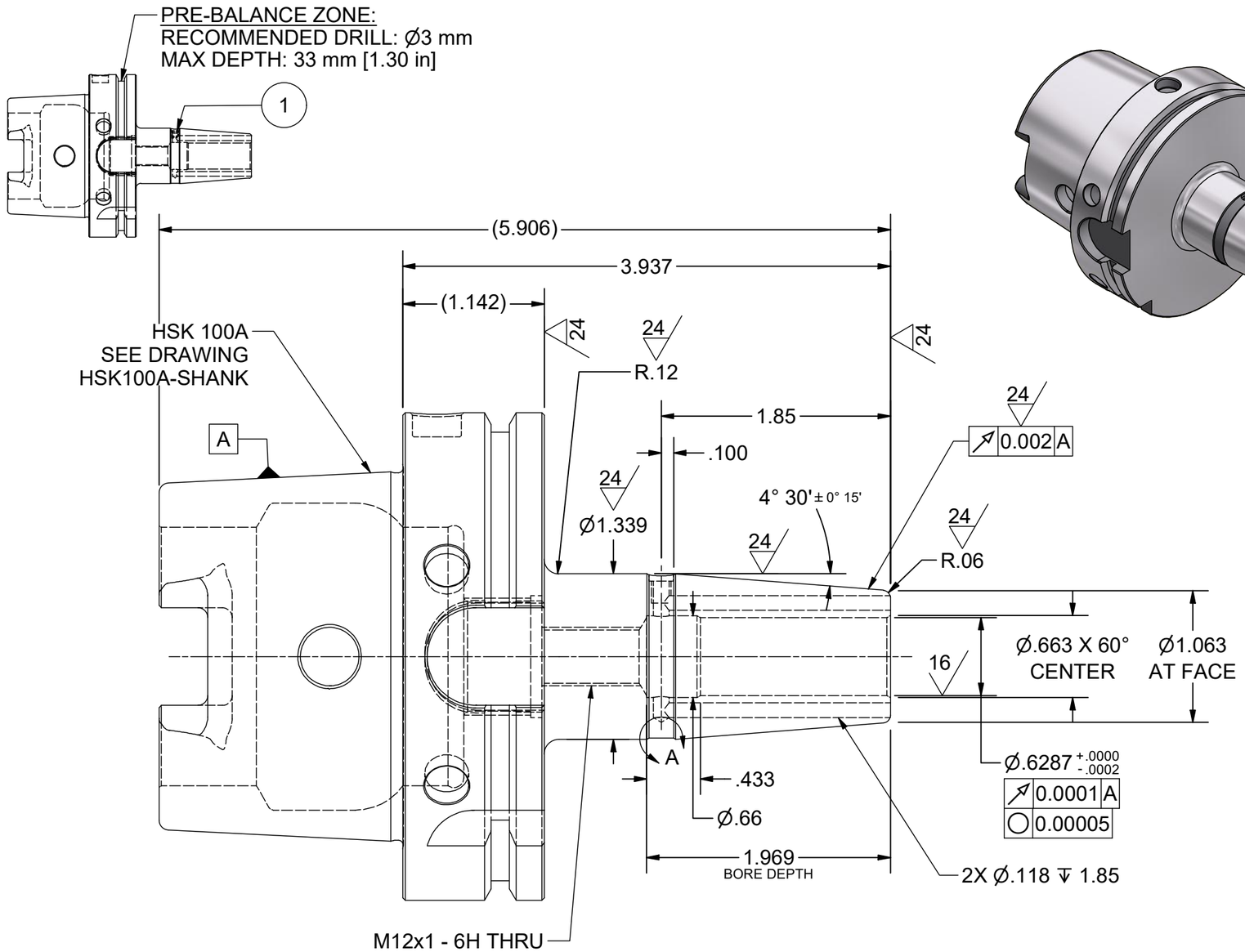

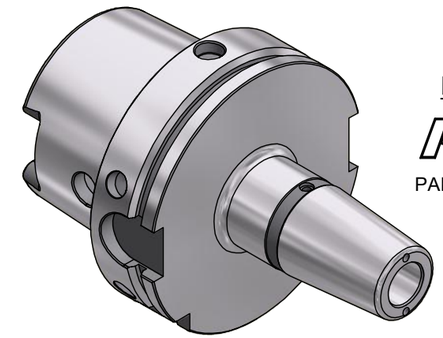

LASER MARKING

PARLEC

PART NUMBER W/O NUMBER

MADE IN USA

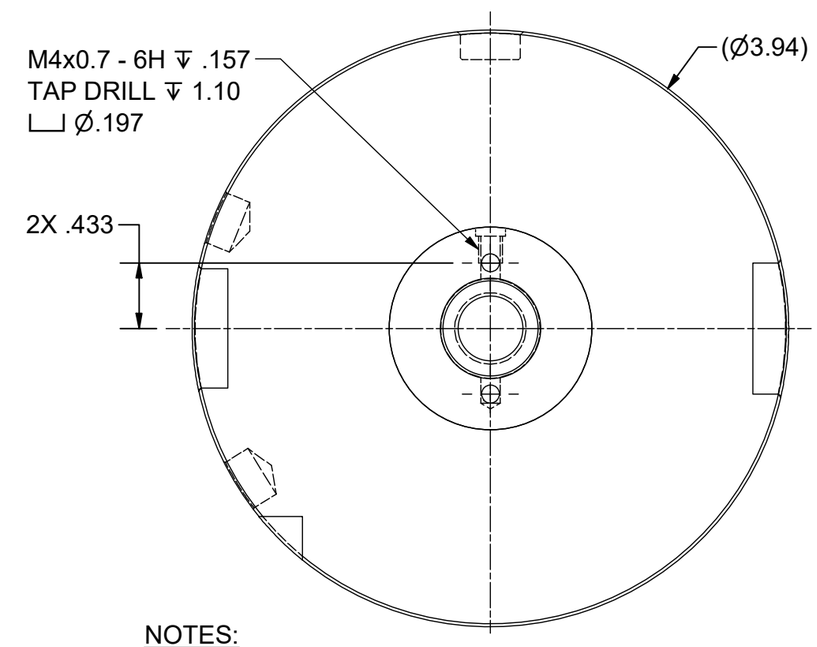

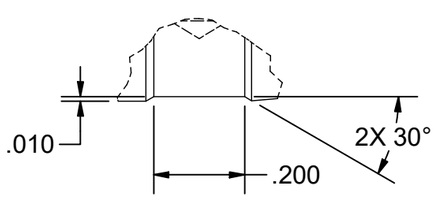

DETAIL A

NOTES:

1.) ALL UNSPECIFIED SURFACES 0.005 A

2.) HEAT TREAT: DOUBLE TEMPER @ 1050°
HARDEN TO Rc: 50-52

3.) PRE-BALANCING: G2.5 @ 15,000 RPM

Parts List

ITEM	QTY	PART NUMBER	DESCRIPTION
1	1	029-060	SET SCREW,M4X.7 X 4MM

THIRD ANGLE PROJECTION

BREAK ALL UNNECESSARY SHARP CORNERS

ANGULAR: ± 1° (DEGREE)

INCH DIMENSIONS	METRIC DIMENSIONS
.X ± .04	X ± 1
.XX ± .015	.X ± 0.5
.XXX ± .005	.XX ± 0.13
.XXXX ± .0002	.XXX ± 0.005

PARLEC

(800) TOOL USA
WORLD HEADQUARTERS
101 PERINTON PARKWAY
FAIRPORT, NEW YORK 14450

PART NAME	SHRINK FIT HLDR		
MATERIAL	H13	SCALE	NONE
HEAT TREAT	SEE NOTE	DATE	11/4/2022
FINISH	BLAST, GRIND		
DRAWN BY	J. SMALL	CHECKED BY	

PART NUMBER H100A-M16SF100-9C

REV. A