Parts List				
ITEM	QTY	PART NUMBER	DESCRIPTION	
1	1	BS-SFM161-20	ADJUSTING SCREW	OPTIONAL

DIN	69893-1
DIN	69882-8

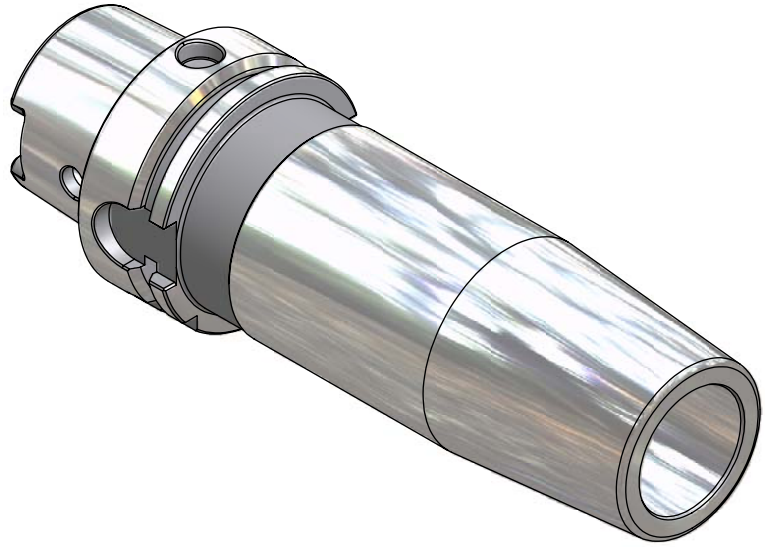

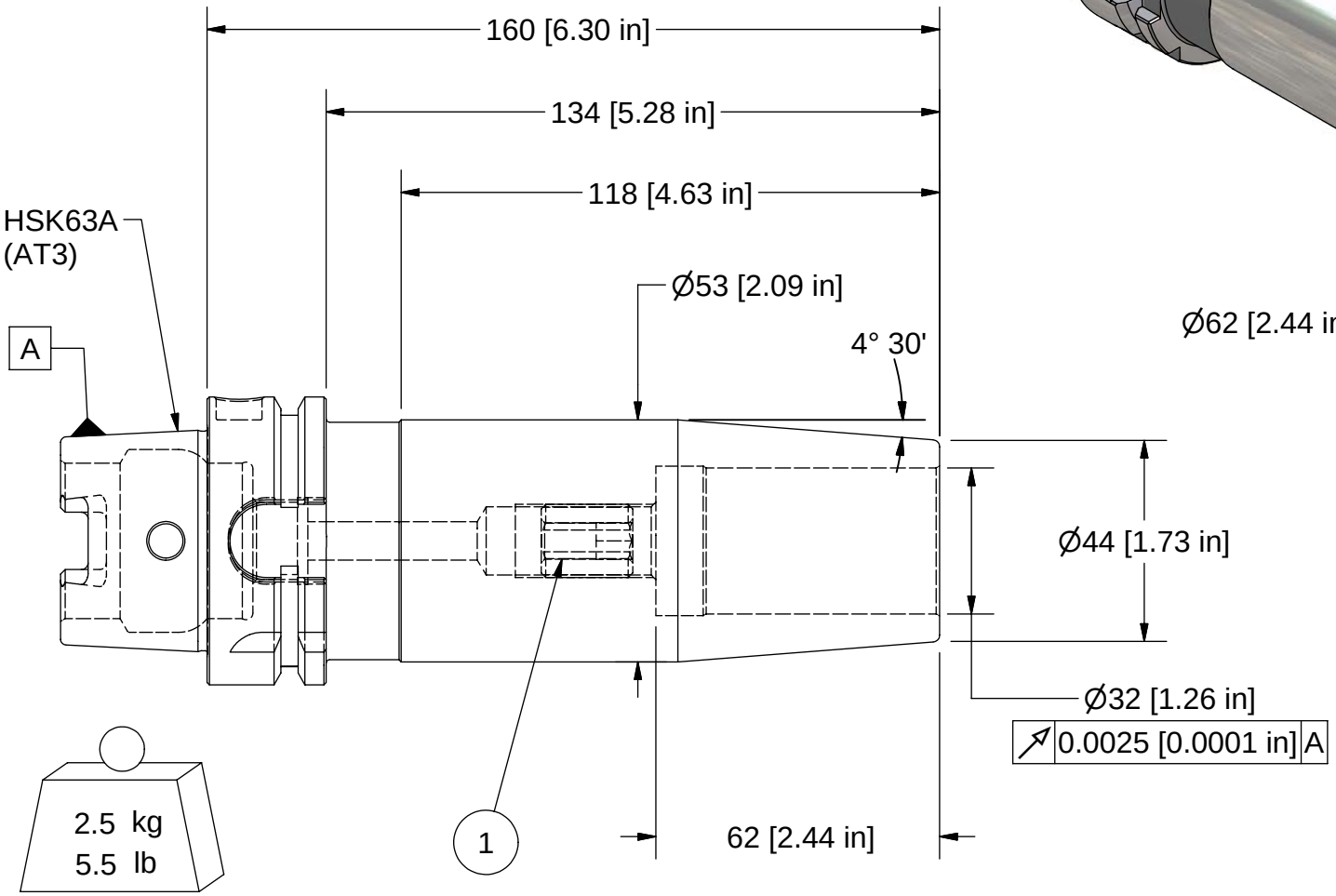

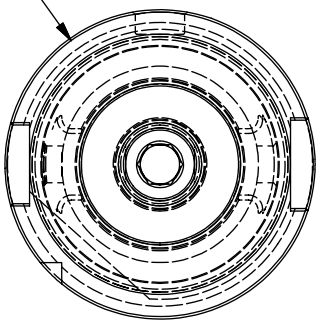

BALANCE
G2.5 @ 20,000 RPM

PART NUMBER H63A-M32SF160-9

PARLEC
(800) TOOL USA
WORLD HEADQUARTERS
101 PERINTON PARKWAY
FAIRPORT, NEW YORK 14450