Parts List			
ITEM	QTY	PART NUMBER	DESCRIPTION
1	1	029-105	SET SCREW, FLAT PT, 5/8-18 x 1.75
2	2	029-930	SET SCREW, WELDON 3/4-16x7/8

THIS DRAWING IS FOR CUSTOMER APPROVAL ONLY

RETURN FAX: 1-800-866-5917

PLEASE NOTE: 1) PARLEC WARRANTIES ALL STANDARD TOOLING AND/OR COMPONENTS. ON ALL SPECIAL CUSTOMER DEFINED TOOLS AND COMPONENTS, PARLEC WARRANTIES ONLY THE ACCURACY OF THE SPECIFICATIONS NOTED ON THE APPROVAL DOCUMENT. THE FUNCTIONALITY OF CUSTOMER DEFINED COMPONENTS (SPECIALS) ARE SOLELY THE RESPONSIBILITY OF THE CUSTOMER. 2) PRICING & DELIVERY IS BASED ON THIS CONCEPT. ANY CUSTOMER CHANGES DURING THE APPROVAL PROCESS MAY RESULT IN CHANGES TO PRICE AND LEAD-TIMES.

SIGNATURE _____ DATE _____

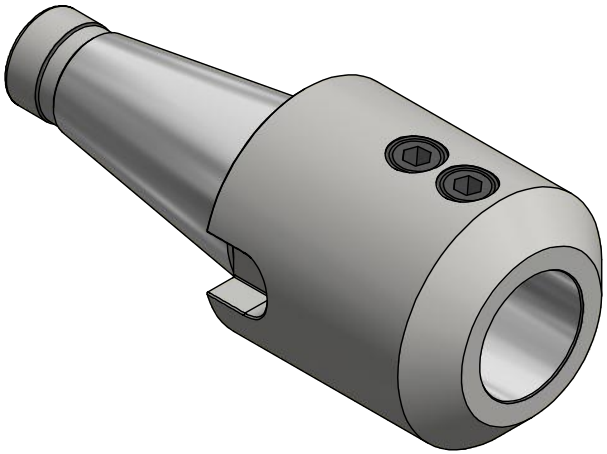

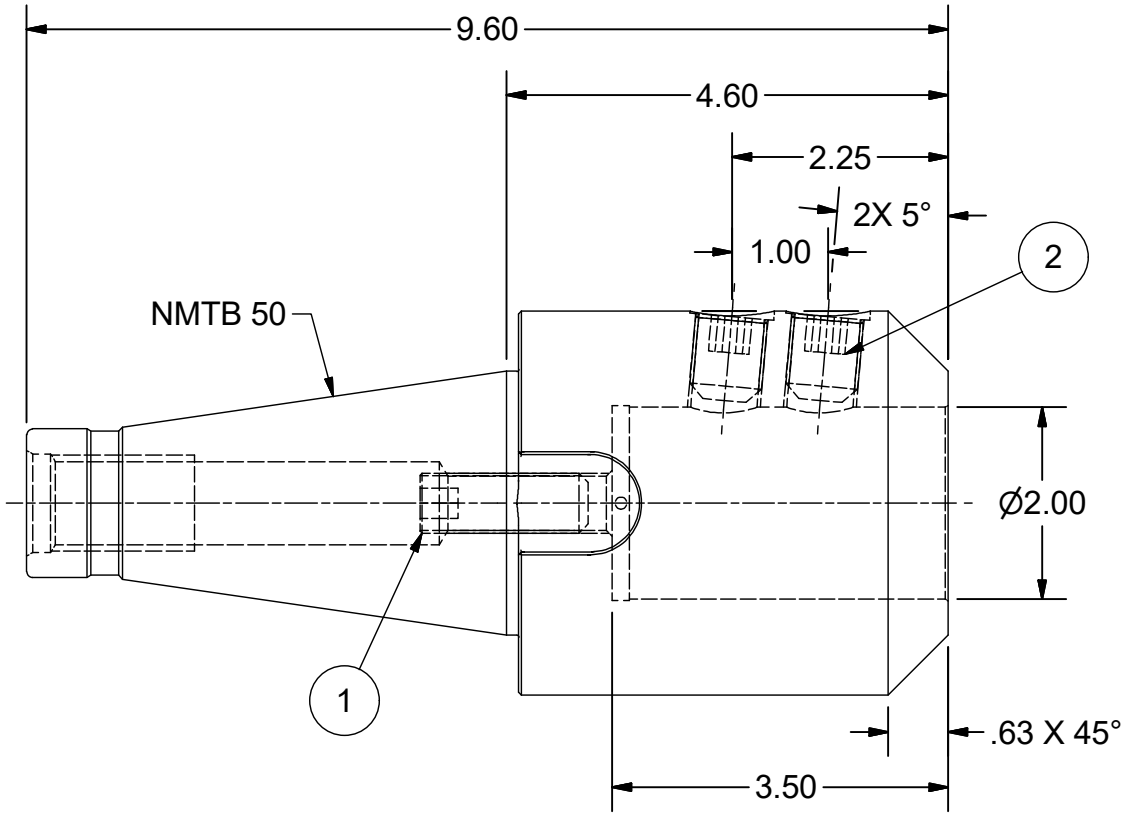

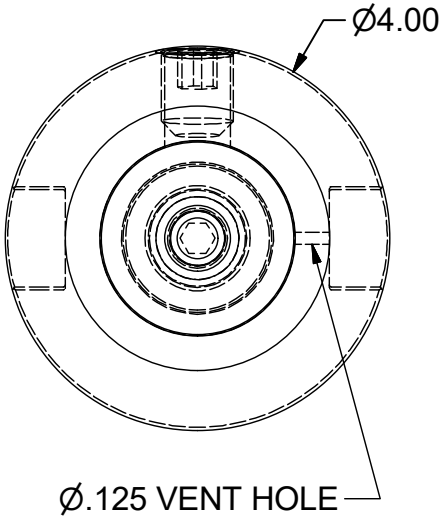

PART NUMBER

N50-20AEM460

PARLEC
(800) TOOL USA
WORLD HEADQUARTERS
101 PERINTON PARKWAY
FAIRPORT, NEW YORK 14450