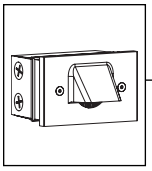

SQUARE VERSA STAR/STEP STAR

CEILING RECESSED & WALL RECESSED - MR16 LOW VOLTAGE

Standard Installation

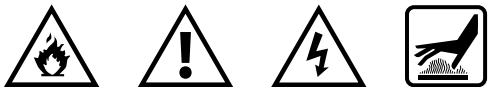

Flammable | Warning | Low Voltage | Hot Surface

TOOLS NEEDED:

- 1/8" Allen Wrench
- Waterproof Wire Connectors

INSTRUCTIONS PERTAINING TO A RISK OF FIRE, OR INJURY TO PERSONS IMPORTANT SAFETY INSTRUCTIONS

Lighted fixture is HOT!
WARNING - To reduce the risk of FIRE OR INJURY TO PERSONS:
Turn off/unplug and allow to cool before replacing lamp/LED. Fixture gets HOT quickly! Contact only switch/plug when turning on. Do not touch hot lens, guard, or enclosure. Keep fixture away from materials that may burn. Do not operate the luminaire fitting with a missing or damaged shield. Do not touch the source at any time. Use a soft cloth or gloves. Oil from skin may cause damage.

SAVE THESE INSTRUCTIONS

IMPORTANT SAFETY INFORMATION - READ, FOLLOW, AND SAVE ALL SAFETY AND INSTALLATION INSTRUCTIONS

- Product must be installed by a qualified person in a manner consistent with its intended use and in compliance with the National Electrical Code, Canadian Electrical Code, and all Local and Provincial Codes.
- Follow product label information and instructions.
- Qualified Personnel with appropriate personal protective equipment must perform all servicing of this product.
- Before wiring to power supply and during servicing, turn off and lock out power at fuse or circuit breaker before service.
- The use of accessory equipment not recommended by the manufacturer or installed contrary to instructions may cause an unsafe condition. The use of damaged components may cause an unsafe condition and void product warranty.
- Do not block light emanating from product in whole or part, as this may cause an unsafe condition.
- Never operate the fixture with missing or damaged lens. Lens must be cleaned on regular basis.
- Entire fixture may become extremely hot. Do not touch hot lens or fixture body.
- Replace LED assembly only with correct wattage and type of power supply appropriate for LED assembly.
- All gaskets, o-rings and sealing surfaces must be kept clean during installation and service; failure to do this may cause an unsafe condition and void product warranty.

IMPORTANT LISTINGS AND CERTIFICATIONS

- **Suitable for wet locations**

Please refer to the low voltage design guide at "https://www.bklighting.com/resources/" before installation for proper wire selection.

IMPORTANT NOTE
VQ and **VQL** mount in ceiling. Orientation of installed back box determines faceplate screw orientation.

This set of instructions works for:

SS-CR - Step Star Ceiling Recessed
VS-WR - Versa Star Wall Recessed

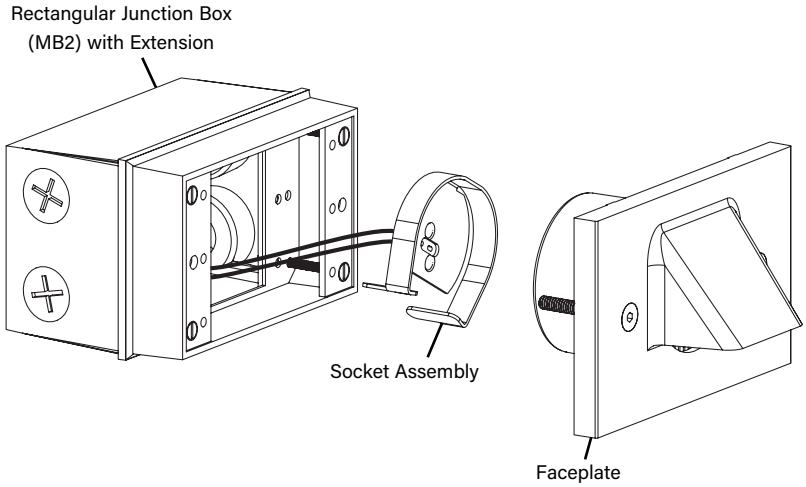

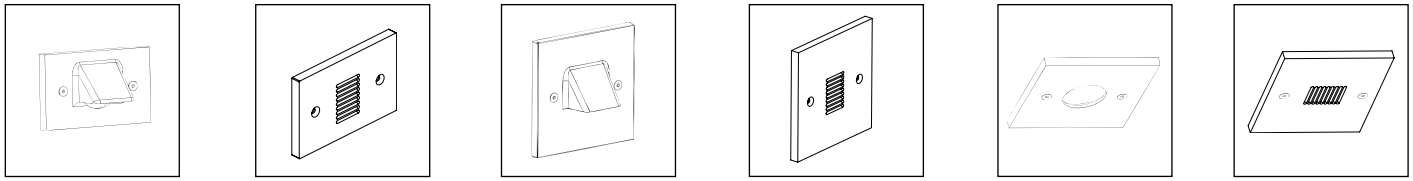

IMPORTANT SAFETY INFORMATION - READ, FOLLOW, AND SAVE THESE INSTALLATION INSTRUCTIONS

B-K LIGHTING

40429 Brickyard Drive • Madera, CA 93636 • USA
559.438.5800 • FAX 559.438.5900
www.bklighting.com • info@bklighting.com

RELEASE DATE 07/18/2023

REFERENCE NUMBER INS-1455-00

THIS DOCUMENT CONTAINS PROPRIETARY INFORMATION OF B-K LIGHTING, INC. AND ITS RECEIPT OR POSSESSION DOES NOT CONVEY ANY RIGHTS TO REPRODUCE, DISCLOSE ITS CONTENTS, OR TO MANUFACTURE, USE OR SELL ANYTHING IT MAY DESCRIBE. REPRODUCTION, DISCLOSURE OR USE WITHOUT SPECIFIC WRITTEN AUTHORIZATION OF B-K LIGHTING, INC. IS STRICTLY FORBIDDEN.

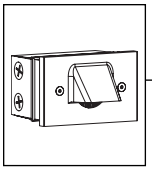

SQUARE VERSA STAR/STEP STAR

CEILING RECESSED & WALL RECESSED - MR16 LOW VOLTAGE

Standard Installation

Phase 1 - Rough In

Installation of Back box

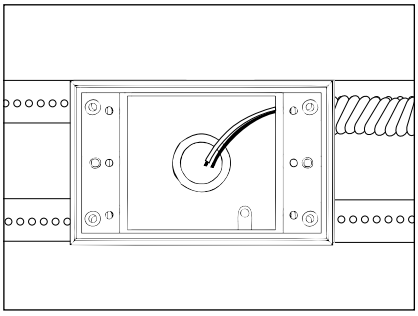

Additional Info

- Please follow National and Local electrical codes for your area.
- Suitable for through wire.
- Suitable for installation into combustible materials.
- Rated for 90° C.
- Orientation of installed back box determines faceplate screw orientation.

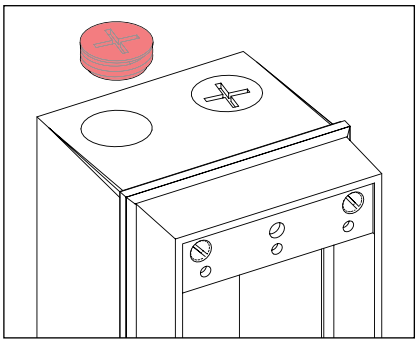

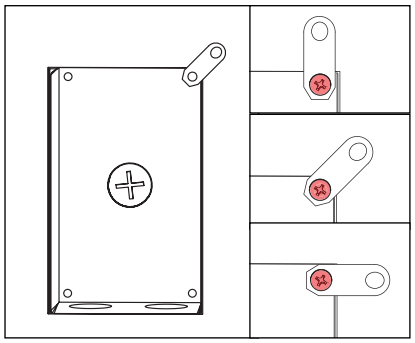

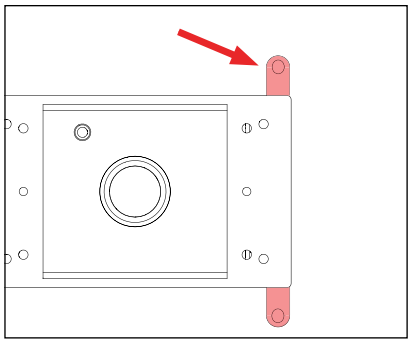

1. Remove canopy and/or fixture from MB2 housing. Ensure unused tapped holes are plugged to maintain seal. Plugs are provided.
2. Install Conduit to be used with this product.

NOTE: Surface conduit is a common entrance for water if not properly sealed. Seal connector threads and conduit with a suitable sealant (teflon tape, adhesive, etc.). Sealing the conduit after knockouts are removed is required to maintain warranty.

3. To prepare MB2 for mounting, align mounting brackets on back of box. Brackets can be aligned to vertical, horizontal or 45° orientation. Secure with mounting screw using screwdriver.

   Install back box so that front face is flush with finished wall or ceiling. Make sure rectangular back box is plumb before proceeding.

4. Mount MB2 box to surface using mounting hardware (included) using the mounting brackets attached to back of MB2 box.

Alternative mounting methods may compromise integrity of MB2 against water intrusion and will void warranty.

5. Connect box to conduit and pull wires for connections **(See Wiring diagram)**.

Phase 2 - Finish Installation of Fixture with Remote Transformer

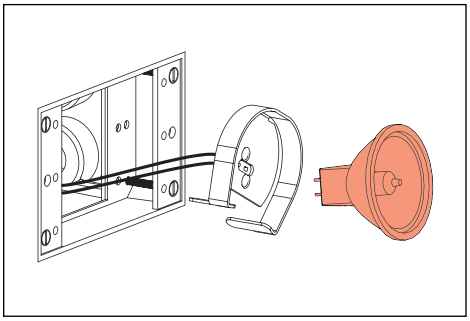

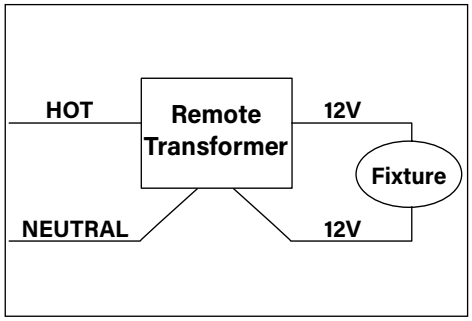

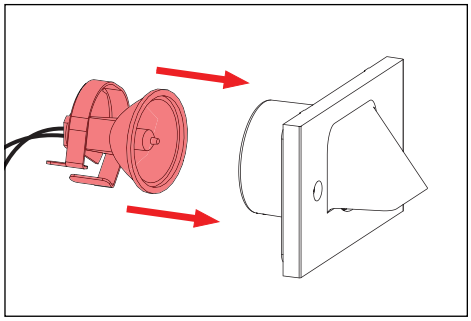

1. Remove socket assembly from faceplate housing. Install lamp if needed. Do not exceed wattage on label.

WIRING DIAGRAM

Low Voltage - For use with 12VAC remote transformer.

2. Make watertight connections from remote transformer to lamp leads using waterproof wire connectors. **See wiring diagram.**

3. Re-insert socket assembly into faceplate.

IMPORTANT SAFETY INFORMATION LISTED ON REVERSE
READ, FOLLOW, AND SAVE ALL SAFETY AND INSTALLATION INSTRUCTIONS

B-K LIGHTING
40429 Brickyard Drive • Madera, CA 93636 • USA
559.438.5800 • FAX 559.438.5900
www.bklighting.com • info@bklighting.com

RELEASE DATE 07/18/2023
REFERENCE NUMBER INS-1455-00

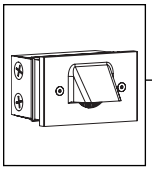

SQUARE VERSA STAR/STEP STAR

CEILING RECESSED & WALL RECESSED - MR16 LOW VOLTAGE

Standard Installation

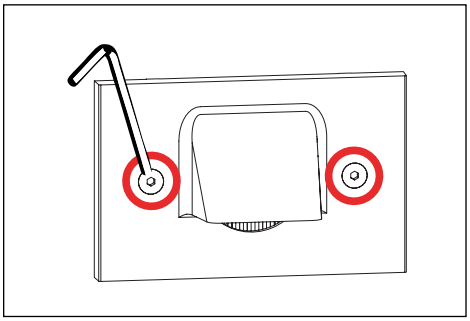

4. Mount faceplate using two (2) #10-24 screws with a 1/8" allen wrench. Tighten to compress gasket. **Do not over tighten.**

IMPORTANT SAFETY INFORMATION LISTED ON REVERSE
READ, FOLLOW, AND SAVE ALL SAFETY AND INSTALLATION INSTRUCTIONS

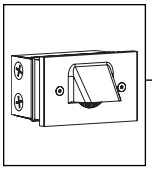

SQUARE VERSA STAR/STEP STAR

CEILING RECESSED & WALL RECESSED - MR16 LOW VOLTAGE - ADJUSTABLE BRACKET

Standard Installation

Flammable

Warning

Low Voltage

Hot Surface

TOOLS NEEDED:

- 1/8" Allen Wrench
- Waterproof Wire Connectors
- Phillips Screwdriver

INSTRUCTIONS PERTAINING TO A RISK OF FIRE, OR INJURY TO PERSONS IMPORTANT SAFETY INSTRUCTIONS

Lighted fixture is HOT!
WARNING - To reduce the risk of FIRE OR INJURY TO PERSONS:
Turn off/unplug and allow to cool before replacing lamp/LED. Fixture gets HOT quickly! Contact only switch/plug when turning on. Do not touch hot lens, guard, or enclosure. Keep fixture away from materials that may burn. Do not operate the luminaire fitting with a missing or damaged shield. Do not touch the source at any time. Use a soft cloth or gloves. Oil from skin may cause damage.

SAVE THESE INSTRUCTIONS

IMPORTANT SAFETY INFORMATION - READ, FOLLOW, AND SAVE ALL SAFETY AND INSTALLATION INSTRUCTIONS

- Product must be installed by a qualified person in a manner consistent with its intended use and in compliance with the National Electrical Code, Canadian Electrical Code, and all Local and Provincial Codes.
- Follow product label information and instructions.
- Qualified Personnel with appropriate personal protective equipment must perform all servicing of this product.
- Before wiring to power supply and during servicing, turn off and lock out power at fuse or circuit breaker before service.
- The use of accessory equipment not recommended by the manufacturer or installed contrary to instructions may cause an unsafe condition. The use of damaged components may cause an unsafe condition and void product warranty.
- Do not block light emanating from product in whole or part, as this may cause an unsafe condition.
- Never operate the fixture with missing or damaged lens. Lens must be cleaned on regular basis.
- Entire fixture may become extremely hot. Do not touch hot lens or fixture body.
- Replace LED assembly only with correct wattage and type of power supply appropriate for LED assembly.
- All gaskets, o-rings and sealing surfaces must be kept clean during installation and service; failure to do this may cause an unsafe condition and void product warranty.

IMPORTANT LISTINGS AND CERTIFICATIONS

- **Suitable for wet locations**

Please refer to the low voltage design guide at "https://www.bklighting.com/resources/" before installation for proper wire selection.

IMPORTANT NOTE
VQ and **VQL** mount in ceiling. Orientation of installed back box determines faceplate screw orientation.

This set of instructions works for:

SS-CR - Step Star Ceiling Recessed
VS-WR - Versa Star Wall Recessed

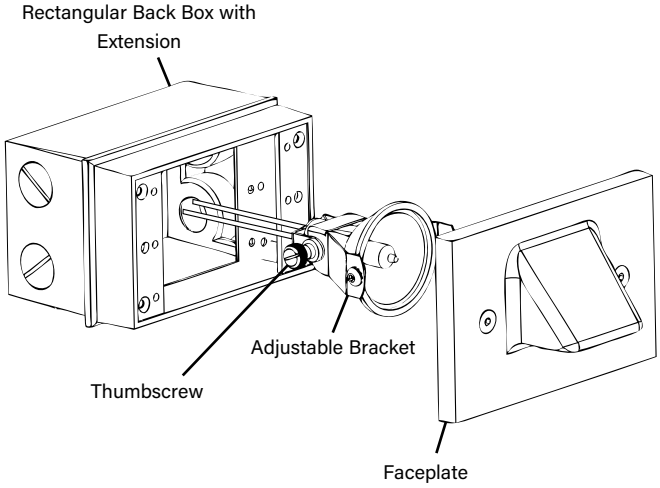

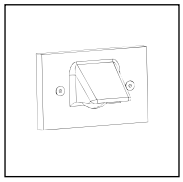
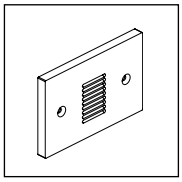
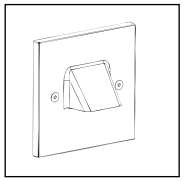
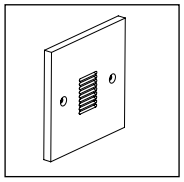
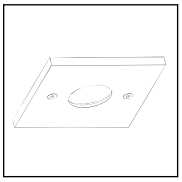
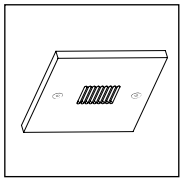

IMPORTANT SAFETY INFORMATION - READ, FOLLOW, AND SAVE THESE INSTALLATION INSTRUCTIONS

B-K LIGHTING

40429 Brickyard Drive • Madera, CA 93636 • USA
559.438.5800 • FAX 559.438.5900
www.bklighting.com • info@bklighting.com

RELEASE DATE 07/18/2023

REFERENCE NUMBER INS-1455-00

THIS DOCUMENT CONTAINS PROPRIETARY INFORMATION OF B-K LIGHTING, INC. AND ITS RECEIPT OR POSSESSION DOES NOT CONVEY ANY RIGHTS TO REPRODUCE, DISCLOSE ITS CONTENTS, OR TO MANUFACTURE, USE OR SELL ANYTHING IT MAY DESCRIBE. REPRODUCTION, DISCLOSURE OR USE WITHOUT SPECIFIC WRITTEN AUTHORIZATION OF B-K LIGHTING, INC. IS STRICTLY FORBIDDEN.

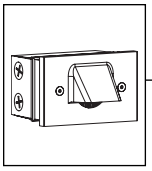

SQUARE VERSA STAR/STEP STAR

CEILING RECESSED & WALL RECESSED - MR16 LOW VOLTAGE - ADJUSTABLE BRACKET

Standard Installation

Phase 1 - Rough In

Installation of Back box

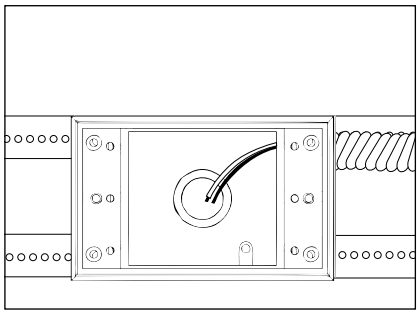

Additional Info

- Please follow National and Local electrical codes for your area.
- Suitable for through wire.
- Suitable for installation into combustible materials.
- Rated for 90° C.
- Orientation of installed back box determines faceplate screw orientation.

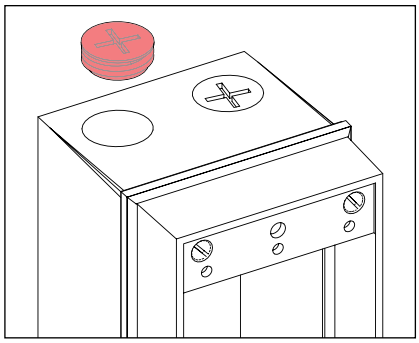

1. Remove canopy and/or fixture from MB2 housing. Ensure unused tapped holes are plugged to maintain seal. Plugs are provided.
2. Install Conduit to be used with this product.

NOTE: Surface conduit is a common entrance for water if not properly sealed. Seal connector threads and conduit with a suitable sealant (teflon tape, adhesive, etc.). Sealing the conduit after knockouts are removed is required to maintain warranty.

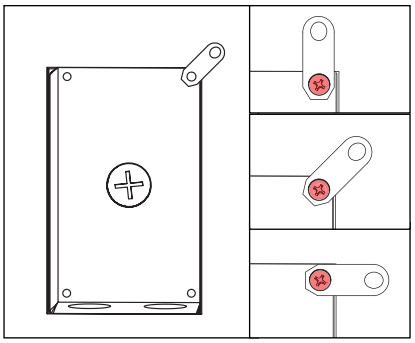

3. To prepare MB2 for mounting, align mounting brackets on back of box. Brackets can be aligned to vertical, horizontal or 45° orientation. Secure with mounting screw using screwdriver.

   Install back box so that front face is flush with finished wall or ceiling. Make sure rectangular back box is plumb before proceeding.

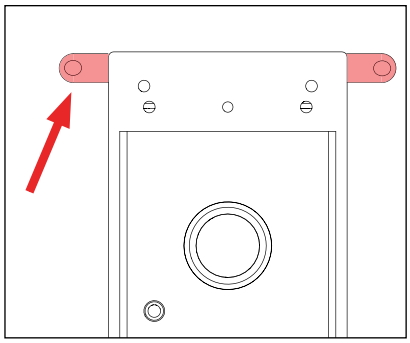

4. Mount MB2 box to surface using mounting hardware (included) using the mounting brackets attached to back of MB2 box.

Alternative mounting methods may compromise integrity of MB2 against water intrusion and will void warranty.

5. Connect box to conduit and pull wires for connections **(See Wiring diagram)**.

Phase 2 - Finish Installation of Fixture with Remote Transformer

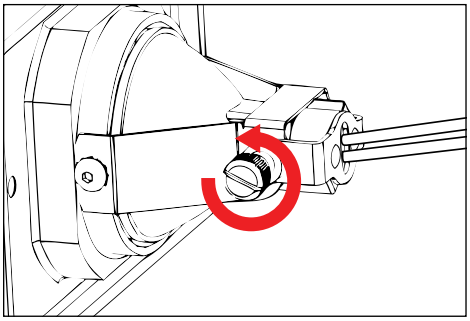

1. To install lamp (if needed), remove socket assembly from faceplate housing by loosening thumbscrew. Do not exceed wattage on label.

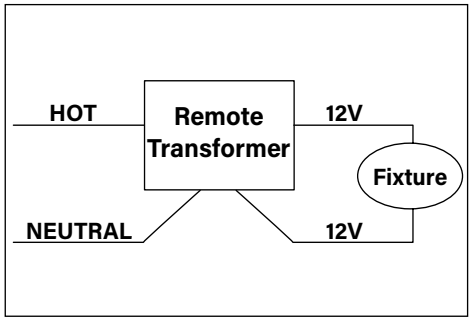

WIRING DIAGRAM

Low Voltage - For use with 12VAC remote transformer.

2. Make watertight connections from remote transformer to lamp leads using waterproof wire connectors. **See wiring diagram.**

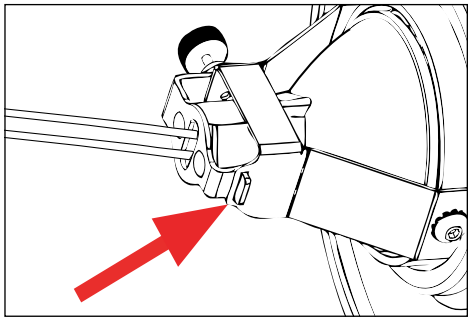

3. Insert tab from socket into notch on adjustable lamp bracket, then tighten thumbscrew.

IMPORTANT SAFETY INFORMATION LISTED ON REVERSE
READ, FOLLOW, AND SAVE ALL SAFETY AND INSTALLATION INSTRUCTIONS

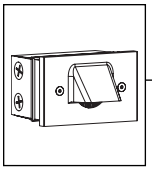

SQUARE VERSA STAR/STEP STAR

CEILING RECESSED & WALL RECESSED - MR16 LOW VOLTAGE - ADJUSTABLE BRACKET

Standard Installation

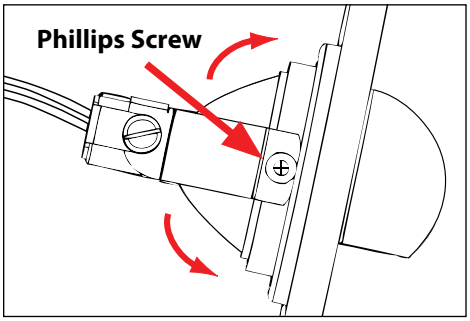

4. Loosen Phillips screws on adjustable lamp bracket and aim lamp to desired angle. When angle is set, tighten Phillips screw to lock in place.

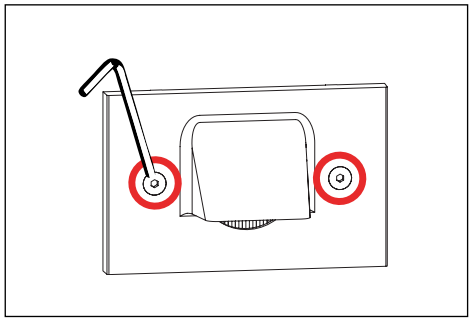

5. Mount faceplate using two (2) #10-24 screws with a 1/8" allen wrench. Tighten to compress gasket. **Do not over tighten.**

IMPORTANT SAFETY INFORMATION LISTED ON REVERSE
READ, FOLLOW, AND SAVE ALL SAFETY AND INSTALLATION INSTRUCTIONS

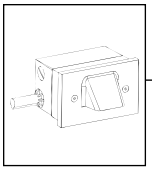

SQUARE VERSA STAR/STEP STAR

CEILING RECESSED & WALL RECESSED - MR16 LOW VOLTAGE - THERMAL PROTECTOR

Standard Installation

TOOLS NEEDED:
- 1/8" Allen Wrench
- Waterproof Wire Connectors

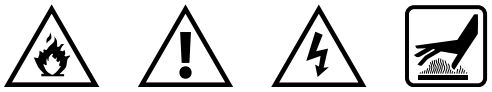

Flammable **Warning** **Low Voltage** **Hot Surface**

INSTRUCTIONS PERTAINING TO A RISK OF FIRE, OR INJURY TO PERSONS IMPORTANT SAFETY INSTRUCTIONS

Lighted fixture is HOT!
WARNING - To reduce the risk of FIRE OR INJURY TO PERSONS:
Turn off/unplug and allow to cool before replacing lamp/LED. Fixture gets HOT quickly! Contact only switch/plug when turning on. Do not touch hot lens, guard, or enclosure. Keep fixture away from materials that may burn. Do not operate the luminaire fitting with a missing or damaged shield. Do not touch the source at any time. Use a soft cloth or gloves. Oil from skin may cause damage.

SAVE THESE INSTRUCTIONS

IMPORTANT SAFETY INFORMATION - READ, FOLLOW, AND SAVE ALL SAFETY AND INSTALLATION INSTRUCTIONS

- Product must be installed by a qualified person in a manner consistent with its intended use and in compliance with the National Electrical Code, Canadian Electrical Code, and all Local and Provincial Codes.
- Follow product label information and instructions.
- Qualified Personnel with appropriate personal protective equipment must perform all servicing of this product.
- Before wiring to power supply and during servicing, turn off and lock out power at fuse or circuit breaker before service.
- The use of accessory equipment not recommended by the manufacturer or installed contrary to instructions may cause an unsafe condition. The use of damaged components may cause an unsafe condition and void product warranty.
- Do not block light emanating from product in whole or part, as this may cause an unsafe condition.
- Never operate the fixture with missing or damaged lens. Lens must be cleaned on regular basis.
- Entire fixture may become extremely hot. Do not touch hot lens or fixture body.
- Replace LED assembly only with correct wattage and type of power supply appropriate for LED assembly.
- All gaskets, o-rings and sealing surfaces must be kept clean during installation and service; failure to do this may cause an unsafe condition and void product warranty.

IMPORTANT LISTINGS AND CERTIFICATIONS

- **Suitable for wet locations**

Please refer to the low voltage design guide at "https://www.bklighting.com/resources/" before installation for proper wire selection.

IMPORTANT NOTE
VQ and **VQL** mount in ceiling. Orientation of installed back box determines faceplate screw orientation.

This set of instructions works for:

SS-CR - Step Star Ceiling Recessed
VS-WR - Versa Star Wall Recessed

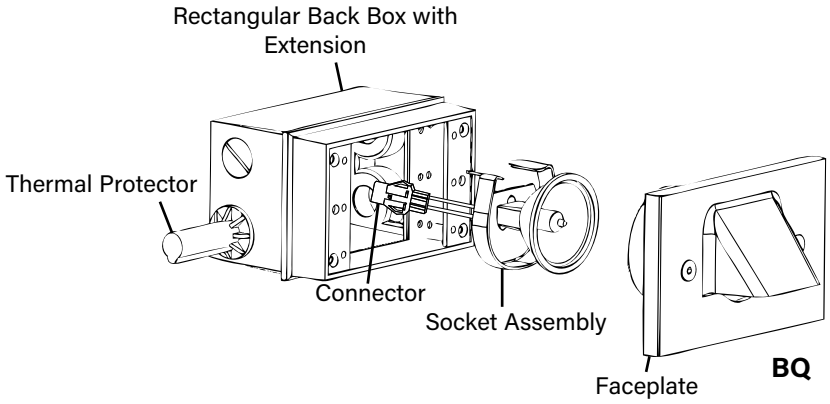

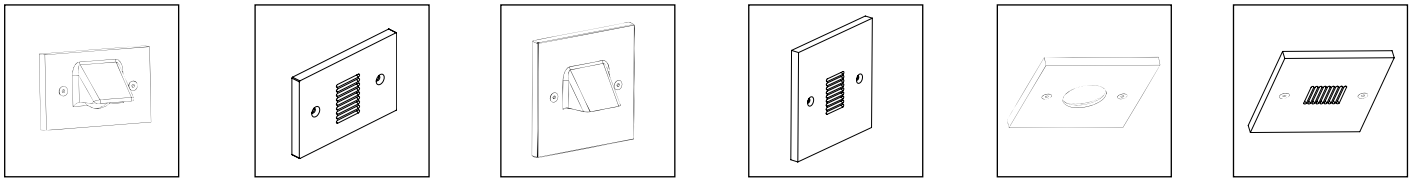

IMPORTANT SAFETY INFORMATION - READ, FOLLOW, AND SAVE THESE INSTALLATION INSTRUCTIONS

B-K LIGHTING
40429 Brickyard Drive • Madera, CA 93636 • USA
559.438.5800 • FAX 559.438.5900
www.bklighting.com • info@bklighting.com

RELEASE DATE 07/18/2023
REFERENCE NUMBER INS-1455-00

THIS DOCUMENT CONTAINS PROPRIETARY INFORMATION OF B-K LIGHTING, INC. AND ITS RECEIPT OR POSSESSION DOES NOT CONVEY ANY RIGHTS TO REPRODUCE, DISCLOSE ITS CONTENTS, OR TO MANUFACTURE, USE OR SELL ANYTHING IT MAY DESCRIBE. REPRODUCTION, DISCLOSURE OR USE WITHOUT SPECIFIC WRITTEN AUTHORIZATION OF B-K LIGHTING, INC. IS STRICTLY FORBIDDEN.

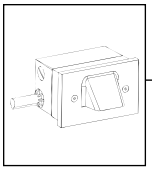

SQUARE VERSA STAR/STEP STAR

CEILING RECESSED & WALL RECESSED - MR16 LOW VOLTAGE - THERMAL PROTECTOR

Standard Installation

Phase 1 - Rough In

Installation of Back box

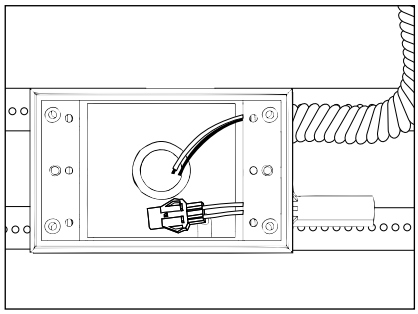

Additional Info

- Please follow National and Local electrical codes for your area.
- Suitable for through wire.
- Suitable for installation into combustible materials.
- Rated for 90° C.
- Orientation of installed back box determines faceplate screw orientation.

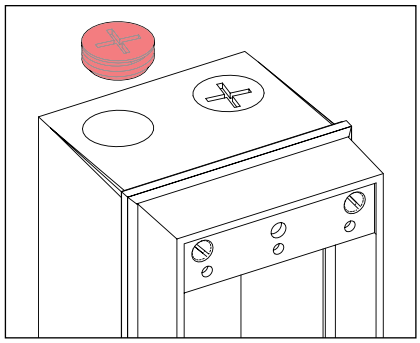

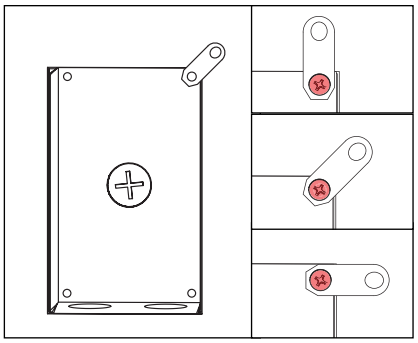

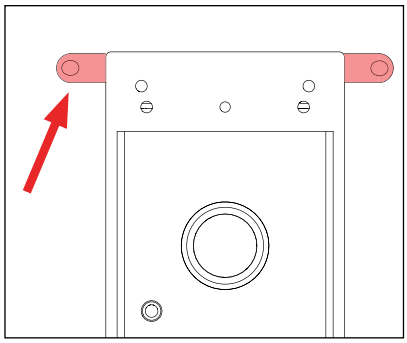

1. Remove canopy and/or fixture from MB2 housing. Ensure unused tapped holes are plugged to maintain seal. Plugs are provided.
2. Install Conduit to be used with this product.

NOTE: Surface conduit is a common entrance for water if not properly sealed. Seal connector threads and conduit with a suitable sealant (teflon tape, adhesive, etc.). Sealing the conduit after knockouts are removed is required to maintain warranty.

3. To prepare MB2 for mounting, align mounting brackets on back of box. Brackets can be aligned to vertical, horizontal or 45° orientation. Secure with mounting screw using screwdriver.

   Install back box so that front face is flush with finished wall or ceiling. Make sure rectangular back box is plumb before proceeding.

4. Mount MB2 box to surface using mounting hardware (included) using the mounting brackets attached to back of MB2 box.

Alternative mounting methods may compromise integrity of MB2 against water intrusion and will void warranty.

5. Connect box to conduit and pull wires for connections **(See Wiring diagram)**.

Phase 2 - Finish Installation of Fixture with Remote Transformer

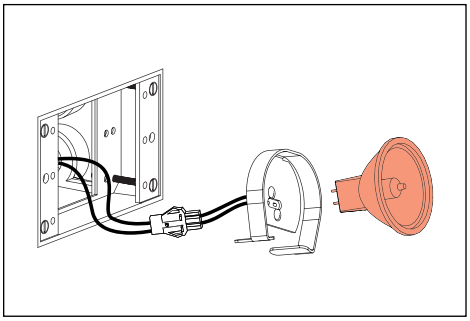

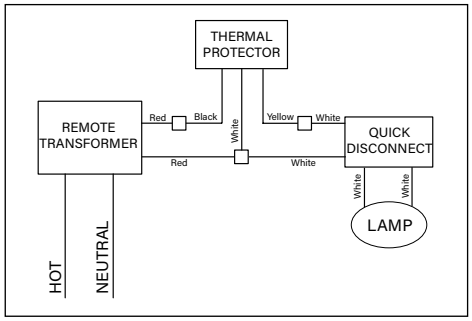

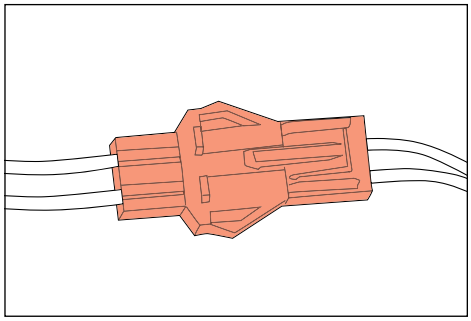

1. Remove socket assembly from faceplate housing. Install lamp if needed. **Do not exceed wattage on label.**

WIRING DIAGRAM

Low Voltage - For use with 12VAC remote transformer.

2. Make watertight connections from remote transformer to thermal protector using waterproof wire connectors. **See wiring diagram.**
3. Connect quick disconnect from thermal protector to lamp leads.
4. Re-insert socket assembly into faceplate.

IMPORTANT SAFETY INFORMATION LISTED ON REVERSE
READ, FOLLOW, AND SAVE ALL SAFETY AND INSTALLATION INSTRUCTIONS

B-K LIGHTING

40429 Brickyard Drive • Madera, CA 93636 • USA
559.438.5800 • FAX 559.438.5900
www.bklighting.com • info@bklighting.com

RELEASE DATE 07/18/2023

REFERENCE NUMBER INS-1455-00

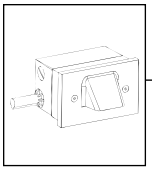

SQUARE VERSA STAR/STEP STAR

CEILING RECESSED & WALL RECESSED - MR16 LOW VOLTAGE - THERMAL PROTECTOR

Standard Installation

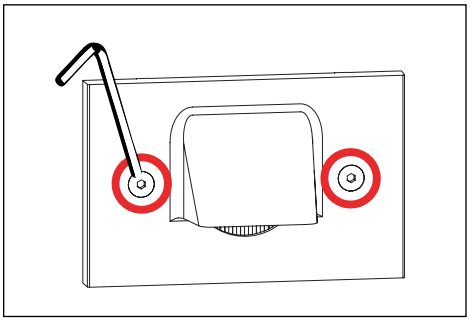

5. Mount faceplate using two (2) #10-24 screws with a 1/8" allen wrench. Tighten to compress gasket. **Do not over tighten.**

IMPORTANT SAFETY INFORMATION LISTED ON REVERSE
READ, FOLLOW, AND SAVE ALL SAFETY AND INSTALLATION INSTRUCTIONS

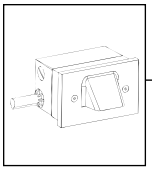

SQUARE VERSA STAR/STEP STAR

CEILING RECESSED & WALL RECESSED - MR16 - ADJUSTABLE BRACKET AND THERMAL PROTECTOR

Standard Installation

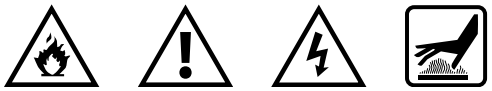

TOOLS NEEDED:

- 1/8" Allen Wrench
- Waterproof Wire Connectors
- Phillips Screwdriver

INSTRUCTIONS PERTAINING TO A RISK OF FIRE, OR INJURY TO PERSONS IMPORTANT SAFETY INSTRUCTIONS

Lighted fixture is HOT!
WARNING - To reduce the risk of FIRE OR INJURY TO PERSONS:
Turn off/unplug and allow to cool before replacing lamp/LED. Fixture gets HOT quickly! Contact only switch/plug when turning on. Do not touch hot lens, guard, or enclosure. Keep fixture away from materials that may burn. Do not operate the luminaire fitting with a missing or damaged shield. Do not touch the source at any time. Use a soft cloth or gloves. Oil from skin may cause damage.

SAVE THESE INSTRUCTIONS

IMPORTANT SAFETY INFORMATION - READ, FOLLOW, AND SAVE ALL SAFETY AND INSTALLATION INSTRUCTIONS

- Product must be installed by a qualified person in a manner consistent with its intended use and in compliance with the National Electrical Code, Canadian Electrical Code, and all Local and Provincial Codes.
- Follow product label information and instructions.
- Qualified Personnel with appropriate personal protective equipment must perform all servicing of this product.
- Before wiring to power supply and during servicing, turn off and lock out power at fuse or circuit breaker before service.
- The use of accessory equipment not recommended by the manufacturer or installed contrary to instructions may cause an unsafe condition. The use of damaged components may cause an unsafe condition and void product warranty.
- Do not block light emanating from product in whole or part, as this may cause an unsafe condition.
- Never operate the fixture with missing or damaged lens. Lens must be cleaned on regular basis.
- Entire fixture may become extremely hot. Do not touch hot lens or fixture body.
- Replace LED assembly only with correct wattage and type of power supply appropriate for LED assembly.
- All gaskets, o-rings and sealing surfaces must be kept clean during installation and service; failure to do this may cause an unsafe condition and void product warranty.

IMPORTANT LISTINGS AND CERTIFICATIONS

- **Suitable for wet locations**

Please refer to the low voltage design guide at "https://www.bklighting.com/resources/" before installation for proper wire selection.

IMPORTANT NOTE
VQ and **VQL** mount in ceiling. Orientation of installed back box determines faceplate screw orientation.

This set of instructions works for:

SS-CR - Step Star Ceiling Recessed
VS-WR - Versa Star Wall Recessed

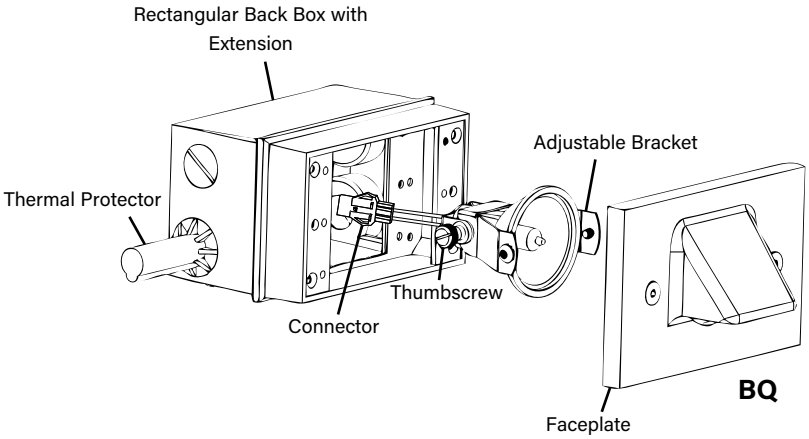

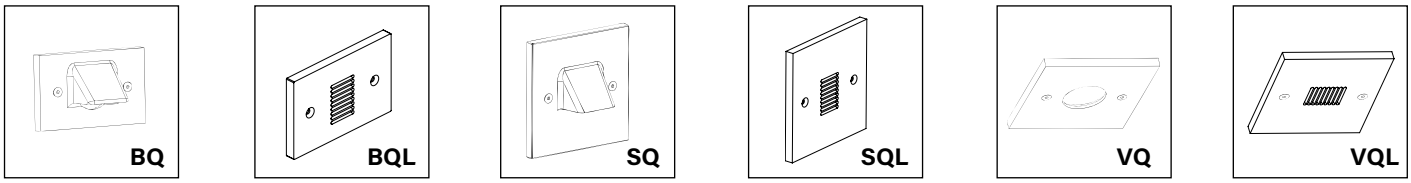

IMPORTANT SAFETY INFORMATION - READ, FOLLOW, AND SAVE THESE INSTALLATION INSTRUCTIONS

B-K LIGHTING
40429 Brickyard Drive • Madera, CA 93636 • USA
559.438.5800 • FAX 559.438.5900
www.bklighting.com • info@bklighting.com

RELEASE DATE 07/18/2023
REFERENCE NUMBER INS-1455-00

THIS DOCUMENT CONTAINS PROPRIETARY INFORMATION OF B-K LIGHTING, INC. AND ITS RECEIPT OR POSSESSION DOES NOT CONVEY ANY RIGHTS TO REPRODUCE, DISCLOSE ITS CONTENTS, OR TO MANUFACTURE, USE OR SELL ANYTHING IT MAY DESCRIBE. REPRODUCTION, DISCLOSURE OR USE WITHOUT SPECIFIC WRITTEN AUTHORIZATION OF B-K LIGHTING, INC. IS STRICTLY FORBIDDEN.

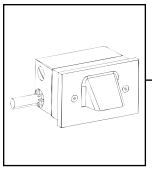

SQUARE VERSA STAR/STEP STAR

CEILING RECESSED & WALL RECESSED - MR16 - ADJUSTABLE BRACKET AND THERMAL PROTECTOR

Standard Installation

Phase 1 - Rough In

Installation of Back box

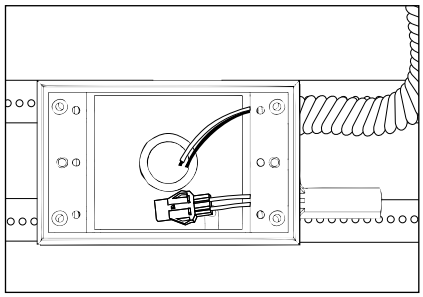

Additional Info

- Please follow National and Local electrical codes for your area.
- Suitable for through wire.
- Suitable for installation into combustible materials.
- Rated for 90° C.
- Orientation of installed back box determines faceplate screw orientation.

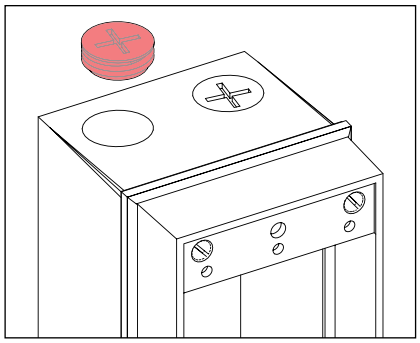

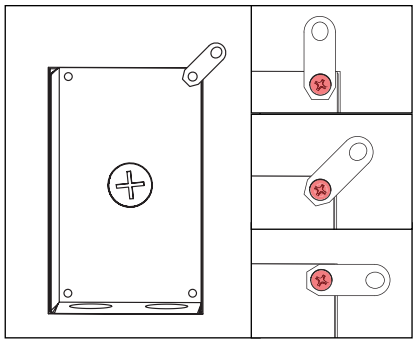

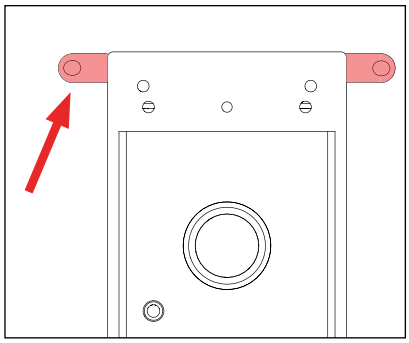

1. Remove canopy and/or fixture from MB2 housing. Ensure unused tapped holes are plugged to maintain seal. Plugs are provided.
2. Install Conduit to be used with this product.

NOTE: Surface conduit is a common entrance for water if not properly sealed. Seal connector threads and conduit with a suitable sealant (teflon tape, adhesive, etc.). Sealing the conduit after knockouts are removed is required to maintain warranty.

3. To prepare MB2 for mounting, align mounting brackets on back of box. Brackets can be aligned to vertical, horizontal or 45° orientation. Secure with mounting screw using screwdriver.

   Install back box so that front face is flush with finished wall or ceiling. Make sure rectangular back box is plumb before proceeding.

4. Mount MB2 box to surface using mounting hardware (included) using the mounting brackets attached to back of MB2 box.

Alternative mounting methods may compromise integrity of MB2 against water intrusion and will void warranty.

5. Connect box to conduit and pull wires for connections **(See Wiring diagram)**.

Phase 2 - Finish Installation of Fixture with Remote Transformer

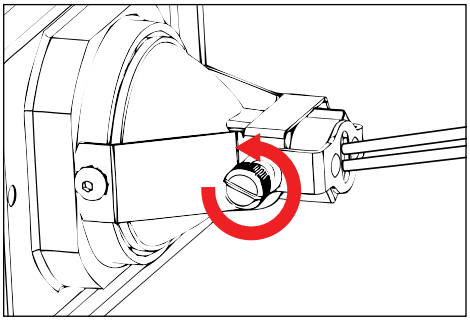

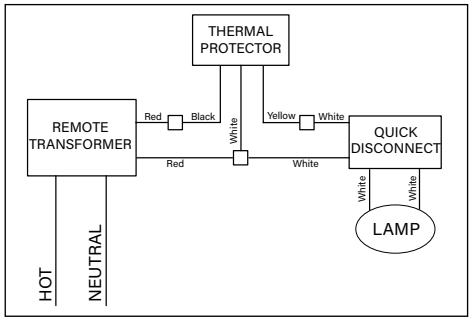

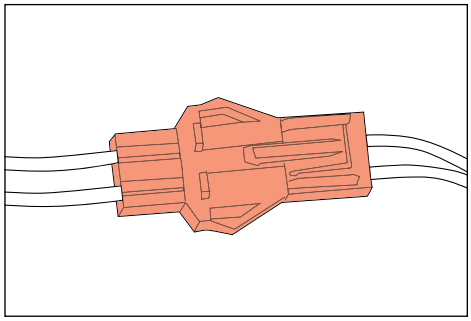

1. To install lamp (if needed), remove socket assembly from faceplate housing by loosening thumbscrew. Do not exceed wattage on label.

WIRING DIAGRAM

Low Voltage - For use with 12VAC remote transformer.

2. Make watertight connections from remote transformer to thermal protector using waterproof wire connectors. **See wiring diagram.**

3. Connect quick disconnect from thermal protector to lamp leads.

IMPORTANT SAFETY INFORMATION LISTED ON REVERSE
READ, FOLLOW, AND SAVE ALL SAFETY AND INSTALLATION INSTRUCTIONS

B-K LIGHTING
40429 Brickyard Drive • Madera, CA 93636 • USA
559.438.5800 • FAX 559.438.5900
www.bklighting.com • info@bklighting.com

RELEASE DATE 07/18/2023
REFERENCE NUMBER INS-1455-00

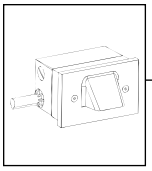

SQUARE VERSA STAR/STEP STAR

CEILING RECESSED & WALL RECESSED - MR16 - ADJUSTABLE BRACKET AND THERMAL PROTECTOR

Standard Installation

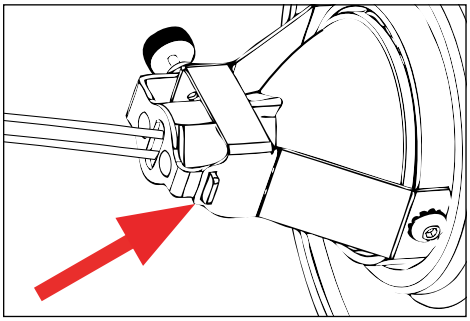

4. Insert tab from socket into notch on adjustable lamp bracket, then tighten thumbscrew.

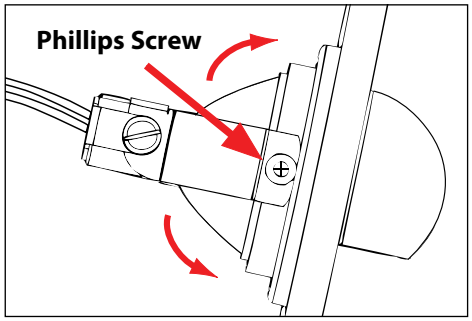

5. Loosen phillip screws on adjustable lamp bracket and aim lamp to desired angle. When angle is set, tighten phillip screw to lock in place.

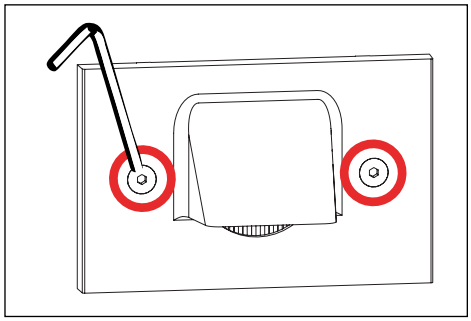

6. Re-insert socket assembly into faceplate.
7. Mount faceplate using two (2) #10-24 screws with a 1/8" allen wrench. Tighten evenly to compress gasket. **Do not over tighten.**

IMPORTANT SAFETY INFORMATION LISTED ON REVERSE
READ, FOLLOW, AND SAVE ALL SAFETY AND INSTALLATION INSTRUCTIONS