

RIO/DENALI/HUME

POLE TOP - INTEGRAL - LED

Standard Installation



TOOLS NEEDED:

- 3/16", 5/32", 9/64", & 5/64" Allen Wrench
- Waterproof Wire Connectors

INSTRUCTIONS PERTAINING TO A RISK OF FIRE, OR INJURY TO PERSONS IMPORTANT SAFETY INSTRUCTIONS

Lighted fixture is HOT!
WARNING - To reduce the risk of FIRE OR INJURY TO PERSONS:
Turn off/unplug and allow to cool before replacing lamp/LED. Fixture gets HOT quickly! Contact only switch/plug when turning on. Do not touch hot lens, guard, or enclosure. Keep fixture away from materials that may burn. Do not operate the luminaire fitting with a missing or damaged shield. Do not touch the source at any time. Use a soft cloth or gloves. Oil from skin may cause damage.

SAVE THESE INSTRUCTIONS

IMPORTANT SAFETY INFORMATION - READ, FOLLOW, AND SAVE ALL SAFETY AND INSTALLATION INSTRUCTIONS

- Product must be installed by a qualified person in a manner consistent with its intended use and in compliance with the National Electrical Code, Canadian Electrical Code, and all Local and Provincial Codes.
- Follow product label information and instructions.
- Qualified Personnel with appropriate personal protective equipment must perform all servicing of this product.
- Before wiring to power supply and during servicing, turn off and lock out power at fuse or circuit breaker before service.
- The use of accessory equipment not recommended by the manufacturer or installed contrary to instructions may cause an unsafe condition. The use of damaged components may cause an unsafe condition and void product warranty.
- Do not block light emanating from product in whole or part, as this may cause an unsafe condition.
- Never operate the fixture with missing or damaged lens. Lens must be cleaned on regular basis.
- Entire fixture may become extremely hot. Do not touch hot lens or fixture body.
- Replace LED assembly only with correct wattage and type of power supply appropriate for LED assembly.
- All gaskets, o-rings and sealing surfaces must be kept clean during installation and service; failure to do this may cause an unsafe condition and void product warranty.

IMPORTANT LISTINGS AND CERTIFICATIONS

- **Suitable for wet locations**

RIO - 2090

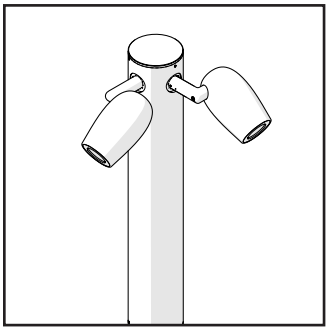

HUME - 2090

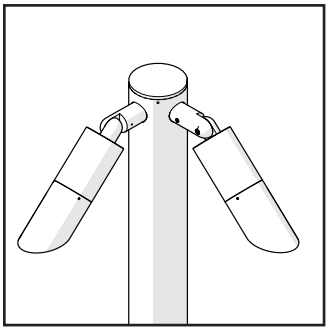

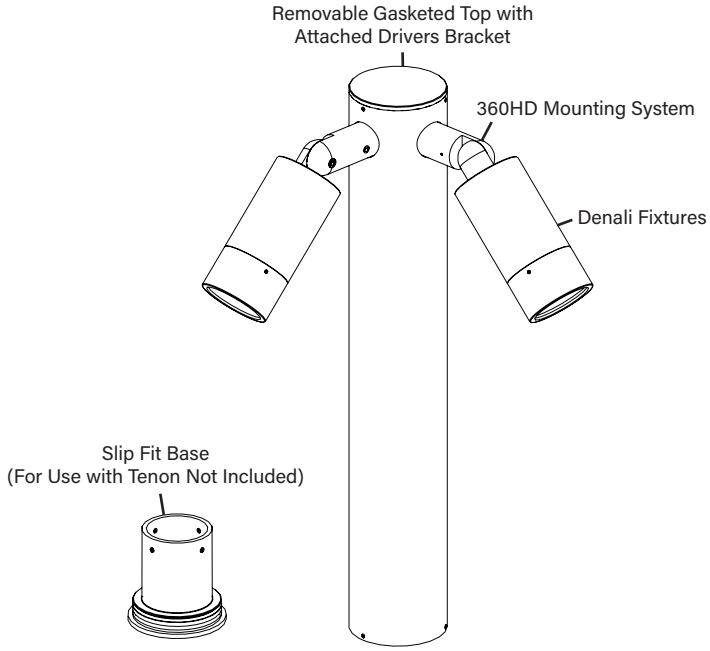

IMPORTANT SAFETY INFORMATION - READ, FOLLOW, AND SAVE THESE INSTALLATION INSTRUCTIONS

B-K LIGHTING

40429 Brickyard Drive • Madera, CA 93636 • USA
559.438.5800 • FAX 559.438.5900
www.bklighting.com • info@bklighting.com

RELEASE DATE 05/15/2023

REFERENCE NUMBER INS-2865-00

THIS DOCUMENT CONTAINS PROPRIETARY INFORMATION OF B-K LIGHTING, INC. AND ITS RECEIPT OR POSSESSION DOES NOT CONVEY ANY RIGHTS TO REPRODUCE, DISCLOSE ITS CONTENTS, OR TO MANUFACTURE, USE OR SELL ANYTHING IT MAY DESCRIBE. REPRODUCTION, DISCLOSURE OR USE WITHOUT SPECIFIC WRITTEN AUTHORIZATION OF B-K LIGHTING, INC. IS STRICTLY FORBIDDEN.

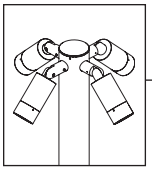

RIO/DENALI/HUME

POLE TOP - INTEGRAL - LED

Standard Installation

Fixture Installation

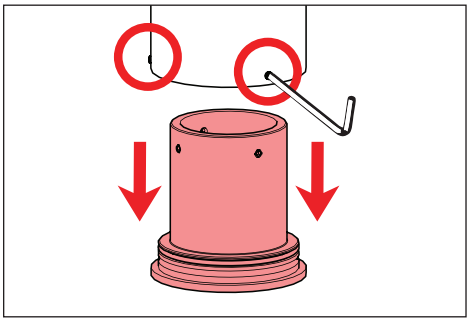

1. Separate slip fit base from pole housing. Loosen three (3) #10-32 set screws using a 3/32" allen wrench. **Do not fully remove set screws.**

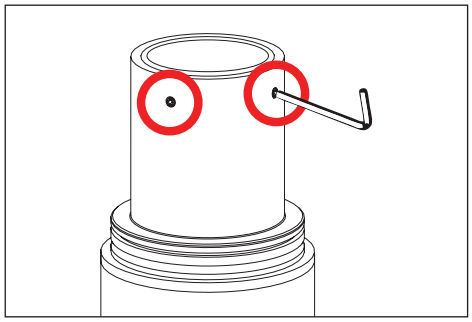

2. Place slip fit base over pole with 2-3/8" dia x 4" tall tenon. Secure base to tenon by tightening four (4) 1/4"-20 set screws using a 1/8" allen wrench.

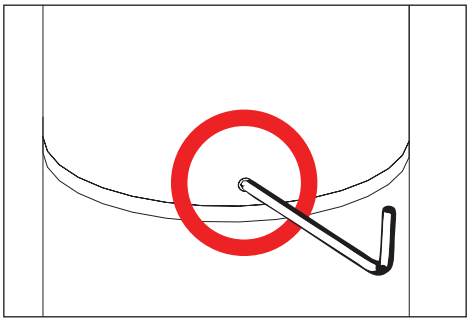

3. Install pole housing onto slip fit base. Secure by tightening three (3) #10-32 set screws using a 3/32" allen wrench.

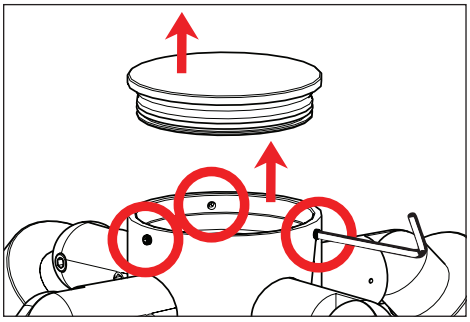

4. Remove pole cap from pole housing. Loosen three (3)#10-32 set screws using a 3/32" allen wrench. Pull primary branch circuit wiring to the top of pole housing.

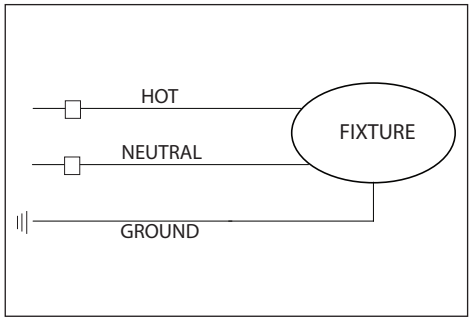

WIRING DIAGRAM - INC

5. Make watertight connections from primary branch circuit to pre-wired fixture leads using waterproof wire connections. **See wiring diagram.**

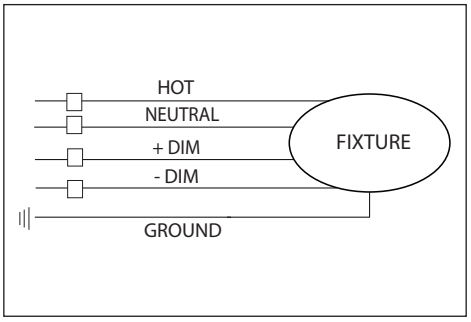

WIRING DIAGRAM - 0-10

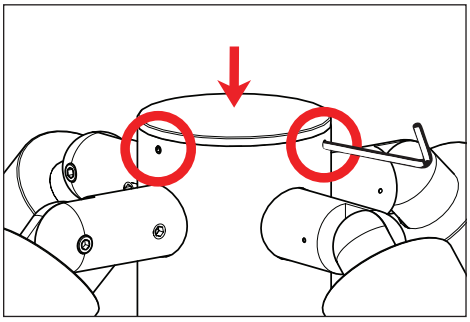

6. Place connections into pole housing. Re-install pole cap onto pole housing. Secure by tightening three (3) #10-32 set screws using a 3/32" allen wrench.

IMPORTANT SAFETY INFORMATION LISTED ON REVERSE
READ, FOLLOW, AND SAVE ALL SAFETY AND INSTALLATION INSTRUCTIONS

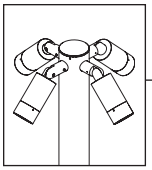

RIO/DENALI/HUME

POLE TOP - INTEGRAL - LED

Standard Installation

360HD Knuckle Mounting System

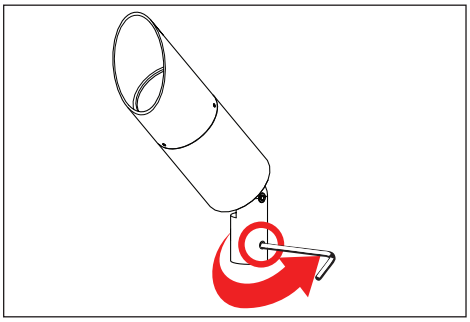

1. Use a 3/16" allen wrench to slightly loosen one (1) 3/8"-16 set screw on the knuckle for 360° aiming purpose.
2. Rotate fixture at base and aim fixture to desired horizontal location.

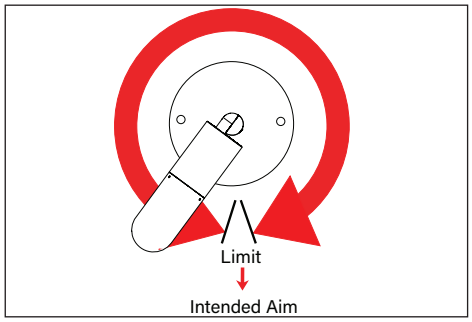

3. If the over-rotation protection pin is in the desired aiming position, do not force the fixture past the limit. Using a 3/16" allen wrench, slightly loosen both set screws in the knuckle, enough to move the fixture freely on both axes.

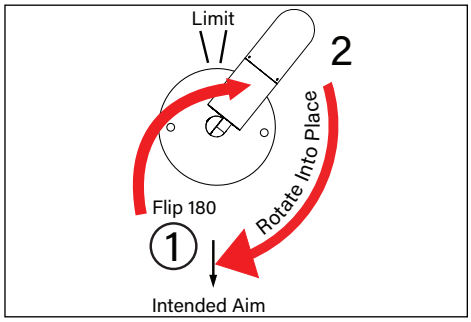

4. Flip the fixture 180 degrees over the knuckle. The rotational range limit will now be 180 degrees from the original position. Now rotate the fixture into the desired aiming position.
5. Secure aim by tightening one (1) 3/8"-16 set screw using a 3/16" allen wrench.

⚠ **Rotating the cap may be necessary for proper weep hole and cutoff position**

⚠ **Warning: Do not over tighten cap set screws. Doing so will compromise o-ring seal and will void warranty.**

360-Knuckle Mounting System

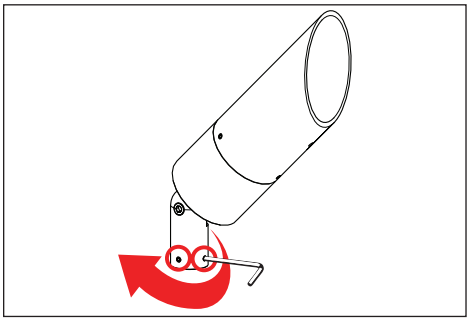

1. Use a 5/64" allen wrench to slightly loosen two (2) #8-32 set screw on the knuckle for 360° aiming purpose.
2. Rotate fixture at base and aim fixture to desired horizontal location.

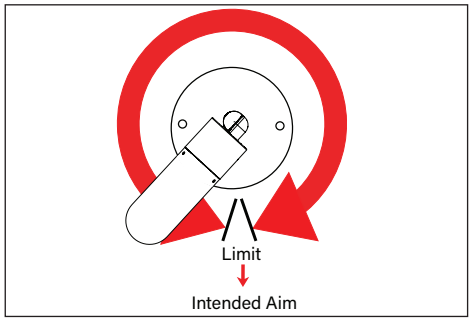

3. If the over-rotation protection pin is in the desired aiming position, do not force the fixture past the limit. Using a 5/64" and 5/32" allen wrench, slightly loosen both set screws in the knuckle and knuckle screw enough to move the fixture freely on both axes.

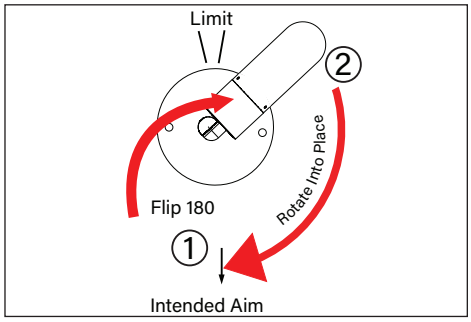

4. Flip the fixture 180 degrees over the knuckle. The rotational range limit will now be 180 degrees from the original position. Now rotate the fixture into the desired aiming position.
5. Secure aim by tightening two (2) #8-32 set screws using a 5/64" allen wrench and one (1) #10-32 screw using a 5/32" allen wrench.

⚠ **Rotating the cap may be necessary for proper weep hole and cutoff position**

⚠ **Warning: Do not over tighten cap set screws. Doing so will compromise o-ring seal and will void warranty.**

IMPORTANT SAFETY INFORMATION LISTED ON REVERSE
READ, FOLLOW, AND SAVE ALL SAFETY AND INSTALLATION INSTRUCTIONS