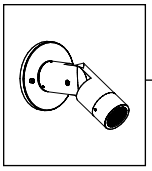

ARTISTAR REMOTE

LED/MR16 - WALL MOUNT

Standard Installation

Flammable

Warning

Low Voltage

Hot Surface

TOOLS NEEDED:

- 3/16", 1/8", & 5/64" Allen Wrench
- Waterproof Wire Connectors
- Mounting Hardware

INSTRUCTIONS PERTAINING TO A RISK OF FIRE, OR INJURY TO PERSONS IMPORTANT SAFETY INSTRUCTIONS

Lighted fixture is HOT!
WARNING - To reduce the risk of FIRE OR INJURY TO PERSONS:
Turn off/unplug and allow to cool before replacing lamp/LED. Fixture gets HOT quickly! Contact only switch/plug when turning on. Do not touch hot lens, guard, or enclosure. Keep fixture away from materials that may burn. Do not operate the luminaire fitting with a missing or damaged shield. Do not touch the source at any time. Use a soft cloth or gloves. Oil from skin may cause damage.

SAVE THESE INSTRUCTIONS

IMPORTANT SAFETY INFORMATION - READ, FOLLOW, AND SAVE ALL SAFETY AND INSTALLATION INSTRUCTIONS

- Product must be installed by a qualified person in a manner consistent with its intended use and in compliance with the National Electrical Code, Canadian Electrical Code, and all Local and Provincial Codes.
- Follow product label information and instructions.
- Qualified Personnel with appropriate personal protective equipment must perform all servicing of this product.
- Before wiring to power supply and during servicing, turn off and lock out power at fuse or circuit breaker before service.
- The use of accessory equipment not recommended by the manufacturer or installed contrary to instructions may cause an unsafe condition. The use of damaged components may cause an unsafe condition and void product warranty.
- Do not block light emanating from product in whole or part, as this may cause an unsafe condition.
- Never operate the fixture with missing or damaged lens. Lens must be cleaned on regular basis.
- Entire fixture may become extremely hot. Do not touch hot lens or fixture body.
- Replace LED assembly only with correct wattage and type of power supply appropriate for LED assembly.
- All gaskets, o-rings and sealing surfaces must be kept clean during installation and service; failure to do this may cause an unsafe condition and void product warranty.

IMPORTANT LISTINGS AND CERTIFICATIONS

• Suitable for wet locations • Additionally suitable for mounting within 4 ft. of the ground

Please refer to the low voltage design guide at "https://www.bklighting.com/resources/" before installation for proper wire selection.

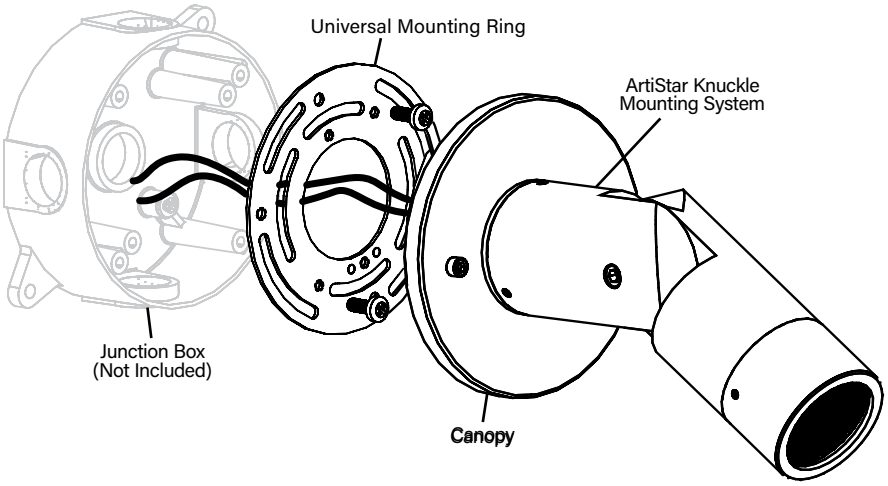

IMPORTANT SAFETY INFORMATION - READ, FOLLOW, AND SAVE THESE INSTALLATION INSTRUCTIONS

B-K LIGHTING

40429 Brickyard Drive • Madera, CA 93636 • USA
559.438.5800 • FAX 559.438.5900
www.bklighting.com • info@bklighting.com

RELEASE DATE 07/27/2023

REFERENCE NUMBER INS-1446-00

THIS DOCUMENT CONTAINS PROPRIETARY INFORMATION OF B-K LIGHTING, INC. AND ITS RECEIPT OR POSSESSION DOES NOT CONVEY ANY RIGHTS TO REPRODUCE, DISCLOSE ITS CONTENTS, OR TO MANUFACTURE, USE OR SELL ANYTHING IT MAY DESCRIBE. REPRODUCTION, DISCLOSURE OR USE WITHOUT SPECIFIC WRITTEN AUTHORIZATION OF B-K LIGHTING, INC. IS STRICTLY FORBIDDEN.

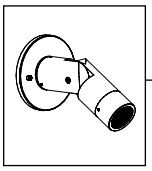

ARTISTAR REMOTE

LED/MR16 - WALL MOUNT

Standard Installation

Phase 1 - Rough In

Installation of Back box

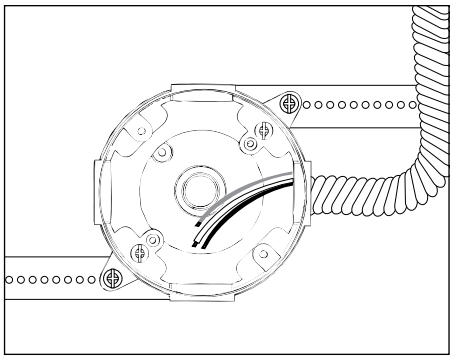

Additional Info

- Please follow National and Local electrical codes for your area.
- Suitable for through wire.
- Suitable for installation into combustible materials.
- Rated for 90° C.
- Junction box, universal mounting ring screws, box mounting hardware and gaskets (not included).

1. Install conduit (not included) to be used with this product.
2. Install junction box (not included) so that front face is flush with finished wall. Seal building envelope as per NEC.
3. Connect box to conduit and pull wires for connections **(See wiring diagram)**.

Phase 2 - Finish Installation of Fixture with Remote Transformer

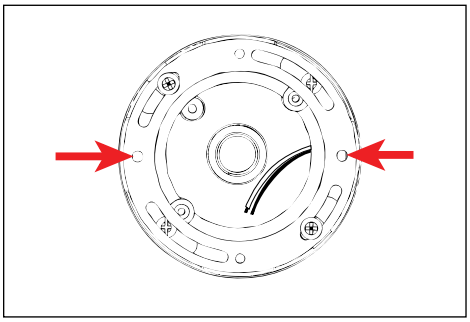

1. Install universal mounting ring (included) using appropriate mounting hardware (not included). Align faceplate mounting holes to final mounting position.

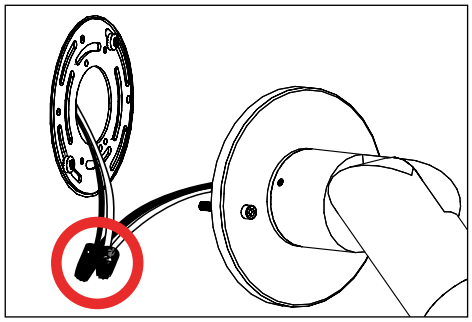

2. Make watertight connections from remote 12V transformer to lamp source leads using waterproof wire connectors (not included). **See wiring diagram.**

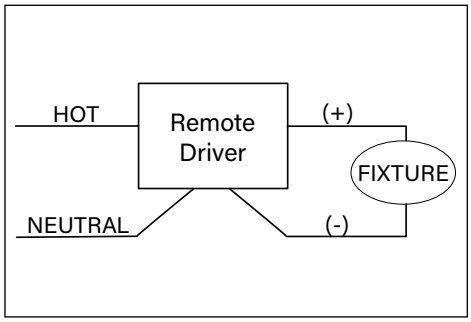

WIRING DIAGRAM

⚠ **LED - For use with 12VAC LED remote transformer or magnetic transformers only. B-K Lighting cannot guarantee performance with third party manufacturers' transformers.**

⚠ **Low Voltage - For use with 12VAC remote transformer.**

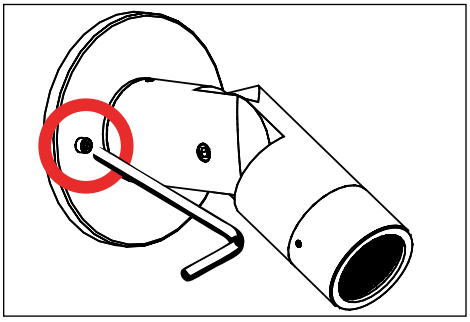

3. Mount fixture using two (2) #10-24 hex screws with a 1/8" allen wrench to installed back box. **Do not over tighten.**

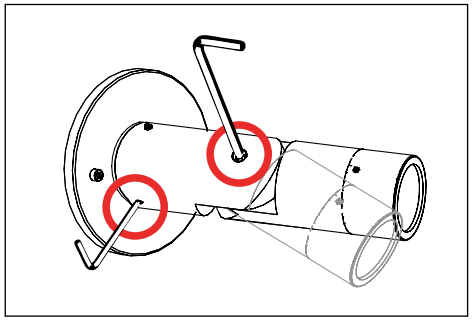

4. Use a 3/16" allen wrench to slightly loosen ¼"-28 stainless steel black oxide socket head cap screw at the knuckle for vertical aiming purposes. Use a 5/64" allen wrench to loosen the three (3) #8-32 stainless steel set screws on anchor base. Rotate fixture at base and aim fixture to desired horizontal location.

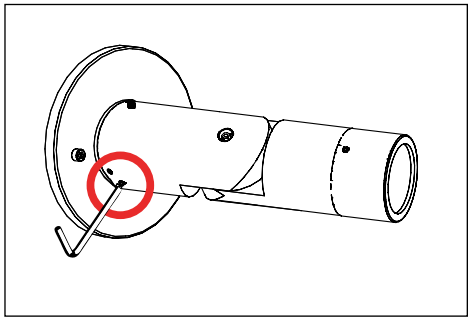

5. Tighten the three (3) #8-32 stainless steel set screws on anchor base and stainless steel locking screw at the knuckle to secure all aiming positions.

IMPORTANT SAFETY INFORMATION LISTED ON REVERSE
READ, FOLLOW, AND SAVE ALL SAFETY AND INSTALLATION INSTRUCTIONS

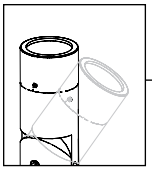

ARTISTAR
MOUNTING SYSTEM

Standard Adjustment

Warning

Hot Surface

TOOLS NEEDED:	
	3/16" & 5/64" Allen wrench
	Phillips Screwdriver

INSTRUCTIONS PERTAINING TO A RISK OF FIRE, OR INJURY TO PERSONS IMPORTANT SAFETY INSTRUCTIONS

Lighted fixture is HOT!
WARNING - To reduce the risk of FIRE OR INJURY TO PERSONS:
Turn off/unplug and allow to cool before replacing lamp/LED. Fixture gets HOT quickly! Contact only switch/plug when turning on. Do not touch hot lens, guard, or enclosure. Keep fixture away from materials that may burn. Do not operate the luminaire fitting with a missing or damaged shield. Do not touch the source at any time. Use a soft cloth or gloves. Oil from skin may cause damage.

SAVE THESE INSTRUCTIONS

IMPORTANT SAFETY INFORMATION - READ, FOLLOW, AND SAVE ALL SAFETY AND INSTALLATION INSTRUCTIONS

- Product must be installed by a qualified person in a manner consistent with its intended use and in compliance with the National Electrical Code, Canadian Electrical Code, and all Local and Provincial Codes.
- Follow product label information and instructions.
- Qualified Personnel with appropriate personal protective equipment must perform all servicing of this product.
- Before wiring to power supply and during servicing, turn off and lock out power at fuse or circuit breaker before service.
- The use of accessory equipment not recommended by the manufacturer or installed contrary to instructions may cause an unsafe condition. The use of damaged components may cause an unsafe condition and void product warranty.
- Do not block light emanating from product in whole or part, as this may cause an unsafe condition.
- Never operate the fixture with missing or damaged lens. Lens must be cleaned on regular basis.
- Entire fixture may become extremely hot. Do not touch hot lens or fixture body.
- Replace LED assembly only with correct wattage and type of power supply appropriate for LED assembly.
- All gaskets, o-rings and sealing surfaces must be kept clean during installation and service; failure to do this may cause an unsafe condition and void product warranty.

IMPORTANT LISTINGS AND CERTIFICATIONS

· Suitable for wet locations · Additionally suitable for mounting within 4 ft. of the ground

ArtiStar Knuckle - Standard Anchor Base Option

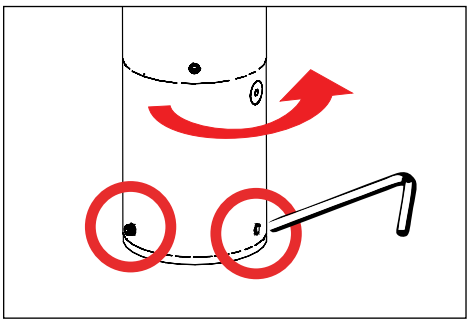

1. Use a 5/64" allen wrench to loosen (3) #8-32 stainless steel set screws on fixture base. Rotate fixture at base and aim fixture to desired horizontal location.

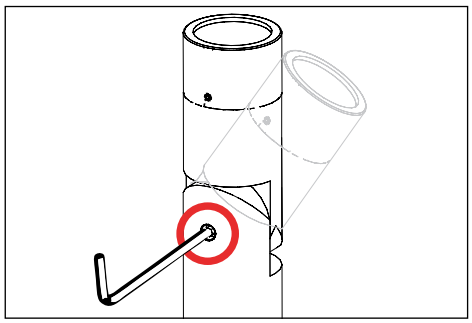

2. Use a 3/16" allen wrench to slightly loosen ¼"-28 stainless steel black oxide socket head cap screw at the knuckle for vertical aiming purposes.

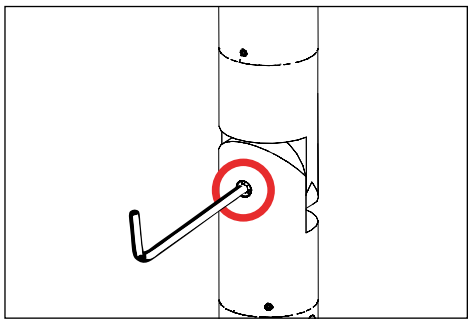

3. Tighten the three (3) #8-32 screws on base with appropriate tool for mounting method and stainless steel locking screw at the knuckle to secure all aiming positions.

ArtiStar Knuckle - Wall Mount Option

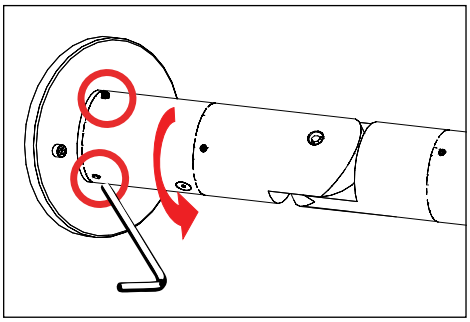

1. Use a 5/64" allen wrench to loosen three (3) #8-32 stainless steel set screws on fixture base. Rotate fixture at base and aim fixture to desired horizontal location.

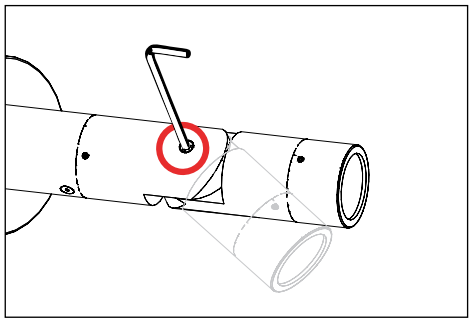

2. Use a 3/16" allen wrench to slightly loosen ¼"-28 stainless steel black oxide socket head cap screw at the knuckle for vertical aiming purposes.

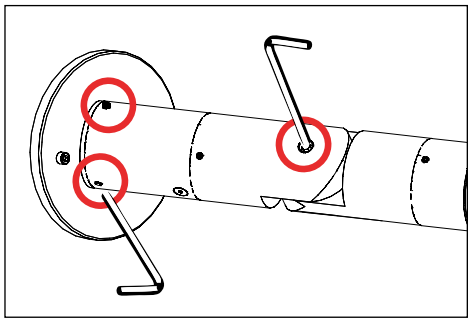

3. Tighten the three (3) #8-32 screws on base with appropriate tool for mounting method and stainless steel locking screw at the knuckle to secure all aiming positions.

IMPORTANT SAFETY INFORMATION - READ, FOLLOW, AND SAVE THESE INSTALLATION INSTRUCTIONS

B-K LIGHTING

40429 Brickyard Drive • Madera, CA 93636 • USA
559.438.5800 • FAX 559.438.5900
www.bklighting.com • info@bklighting.com

RELEASE DATE 07/27/2023

REFERENCE NUMBER INS-2098-00

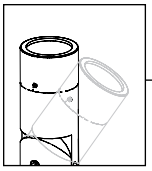

Standard Adjustment

ArtiStar Knuckle - Power Pipe Option

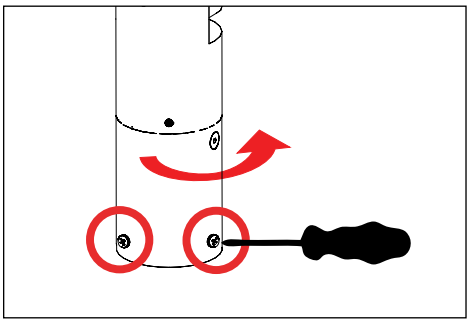

1. Use phillips screwdriver to loosen three (3) #8-32 stainless steel round head phillips screws at base. Rotate fixture at base and aim fixture to desired horizontal location.

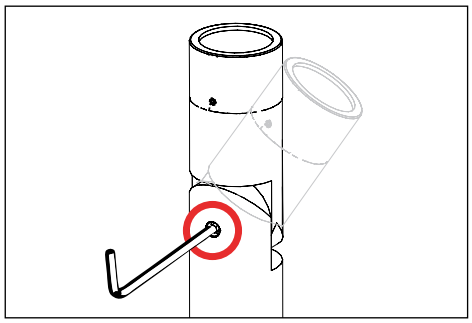

2. Use a 3/16″ allen wrench to slightly loosen ¼″-28 stainless steel black oxide socket head cap screw at the knuckle for vertical aiming purposes.

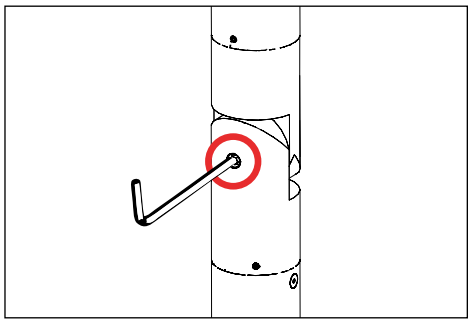

3. Tighten the three (3) #8-32 screws on base with appropriate tool for mounting method and stainless steel locking screw at the knuckle to secure all aiming positions.

IMPORTANT SAFETY INFORMATION LISTED ON REVERSE
READ, FOLLOW, AND SAVE ALL SAFETY AND INSTALLATION INSTRUCTIONS

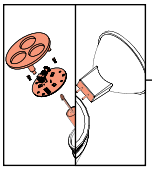

LED & LOW VOLTAGE LED LAMP

2-1/4″ SIZE

Replacement Instructions

This product is available with Adjust-e-Lume® (Patent Pend.) for Dynamic Lumen Output Control

Warning! The light output of this product may be dynamically adjusted as desired to raise and lower light levels. Please ensure the fixture is set to the appropriate light level desired during installation.

Replacing LED Board/Driver and Optics

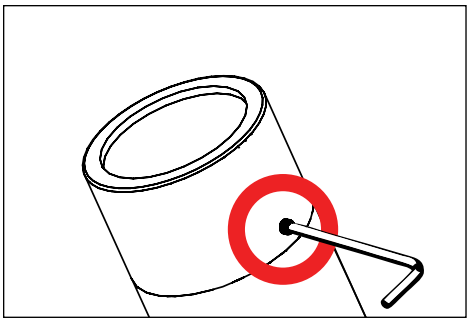

1. Use a 5/64″ allen wrench to loosen #8-32 stainless set screw and remove cap.

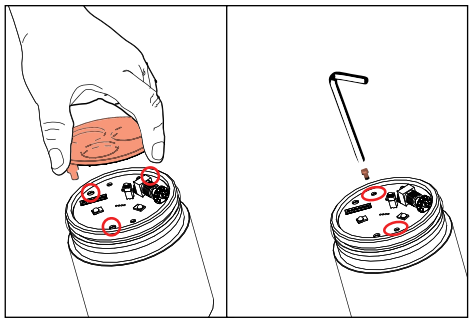

2. Space three fingers evenly around the optic and gently rock optic to remove.
3. Use a 5/64″ allen wrench to remove two (2) #2-56 socket head cap screws on LED board, grasp LED board and gently pull up to expose quick disconnect.

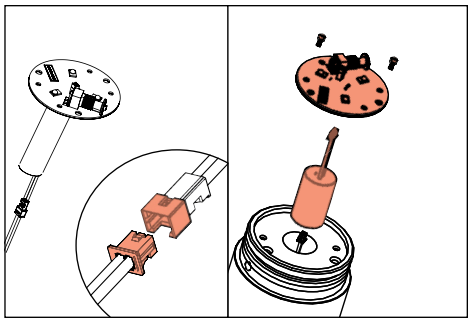

4. Disengage LED board and driver assembly. Replace with new board and driver assembly.
5. Reverse install LED board and driver.
6. With flat head screw driver rotate dial to desired lumen output. Replace cap.

To Change Lumen Output (When Required)

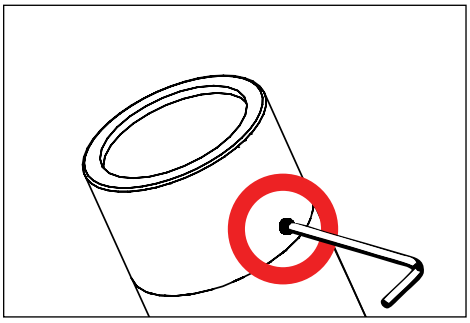

1. Use a 5/64″ allen wrench to loosen #8-32 stainless set screw and remove cap.

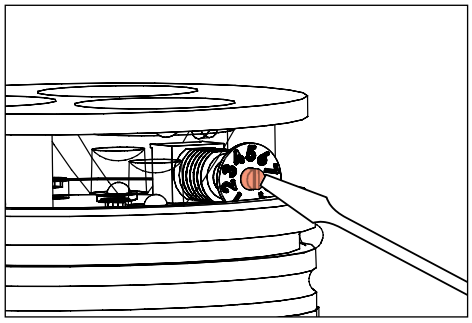

2. With flat head screw driver rotate dial to desired lumen output.

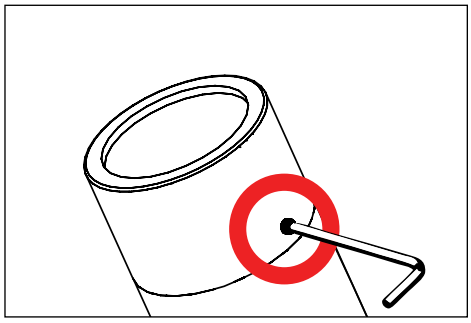

3. Place cap on fixture and tighten set screw. Tighten screw to 1/2 in-lbs. Top of screw should sit flush with fixture cap.

Warning: Do not over tighten set screw. Doing so will compromise o-ring seal and will void warranty. Cap should be able to rotate without force.

IMPORTANT SAFETY INFORMATION LISTED ON REVERSE
READ, FOLLOW, AND SAVE ALL SAFETY AND INSTALLATION INSTRUCTIONS

B-K LIGHTING

40429 Brickyard Drive • Madera, CA 93636 • USA
559.438.5800 • FAX 559.438.5900
www.bklighting.com • info@bklighting.com

RELEASE DATE 05/09/2023

REFERENCE NUMBER INS000004

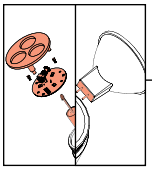

LED & LOW VOLTAGE LED LAMP

2-1/4″ SIZE

Replacement Instructions

This product is available with Adjust-e-Lume® (Patent Pend.) for Dynamic Lumen Output Control

Warning! The light output of this product may be dynamically adjusted as desired to raise and lower light levels. Please ensure the fixture is set to the appropriate light level desired during installation.

Lamp Installation or Relamping if Required for Low Voltage LED Lamps

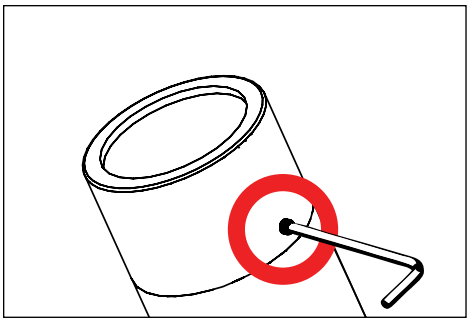

1. Use a 5/64″ allen wrench to loosen #8-32 stainless set screw and remove cap.

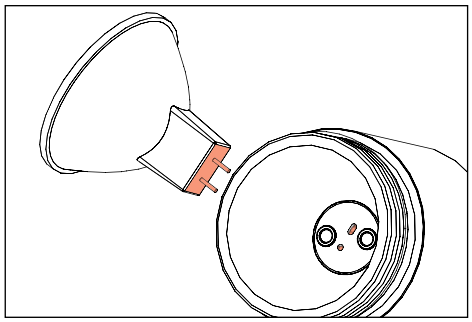

2. Firmly insert lamp pins into socket to make connection. Rocking motion may be required.

Do not exceed the maximum wattage listed on the fixture label before installing.

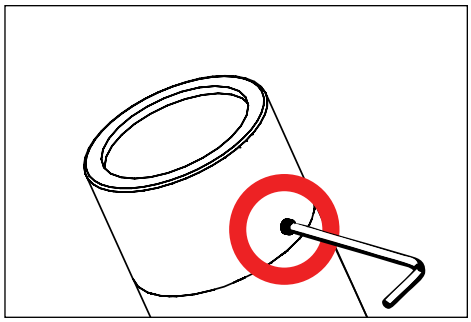

3. Place cap on fixture and tighten set screw. Tighten screw to 1/2 in-lbs. Top of screw should sit flush with fixture cap.

Warning: Do not over tighten set screw. Doing so will compromise o-ring seal and will void warranty. Cap should be able to rotate without force.

IMPORTANT SAFETY INFORMATION LISTED ON REVERSE
READ, FOLLOW, AND SAVE ALL SAFETY AND INSTALLATION INSTRUCTIONS

B-K LIGHTING

40429 Brickyard Drive • Madera, CA 93636 • USA
559.438.5800 • FAX 559.438.5900
www.bklighting.com • info@bklighting.com

RELEASE DATE 05/09/2023

REFERENCE NUMBER INS000004